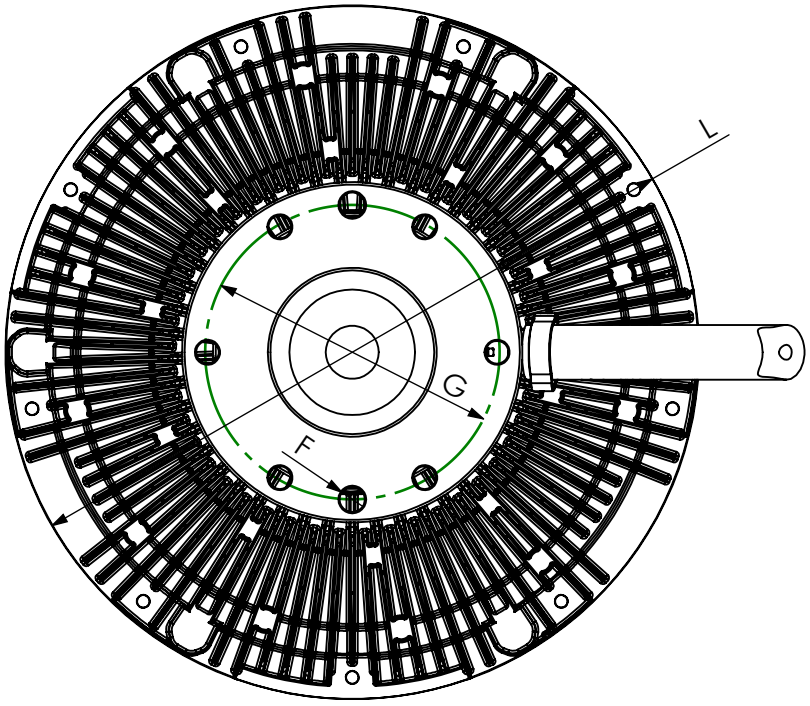

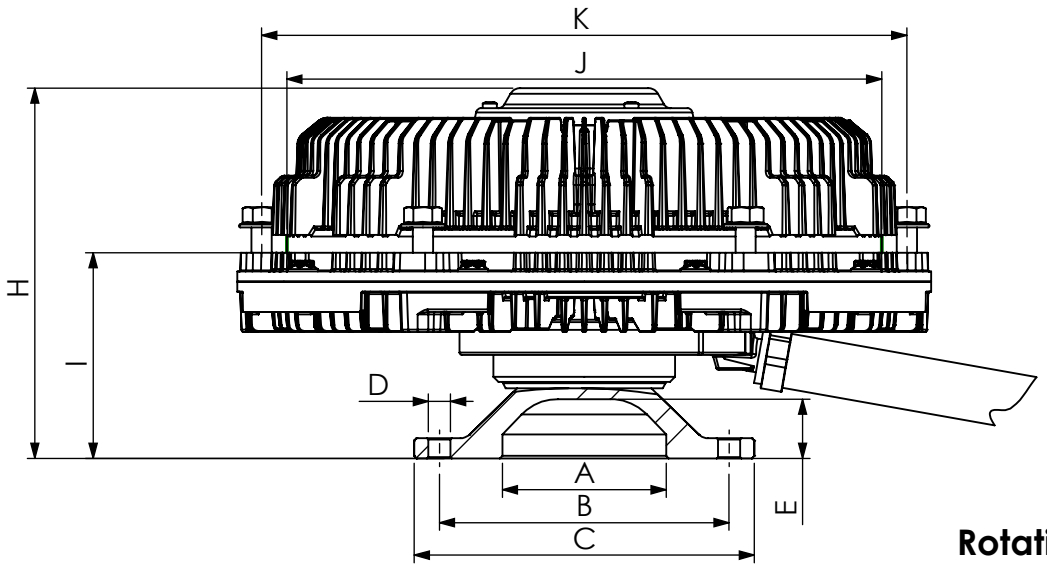

Rotation: Clockwise

Dimensional values

INPUT SHAFT

Ref. nº	Value	Ref. nº	Value
A	∅65 H8 mm	G	∅116.8 mm
B	∅114.9 mm		
C	∅135 h8 mm		
D	6x M8 mm		
E	23.5 ±2 mm		
F	2x∅10 mm		

FAN CLUTCH

Ref. nº	Value	Ref. nº	Value
H	146.9 ±1 mm		
I	81.6 ±0.5 mm		
J	∅236 0 -0.3 mm		
K	∅256 ±0.5 mm		
L	∅275.5 mm		

Modification nº	Modified	Date	Reason
4			
3			
2			
1			

Comments

Drawn	18/10/21 S.S.
Checked	18/10/21 R.U.
Assembly	Technical sheet
General Tolerance	ISO 2768 c-K
Part name	T28
Material	**ID. Reference** 7033429
Scale: 1/3	**Review:** 0

cojali

Sheet 1/1