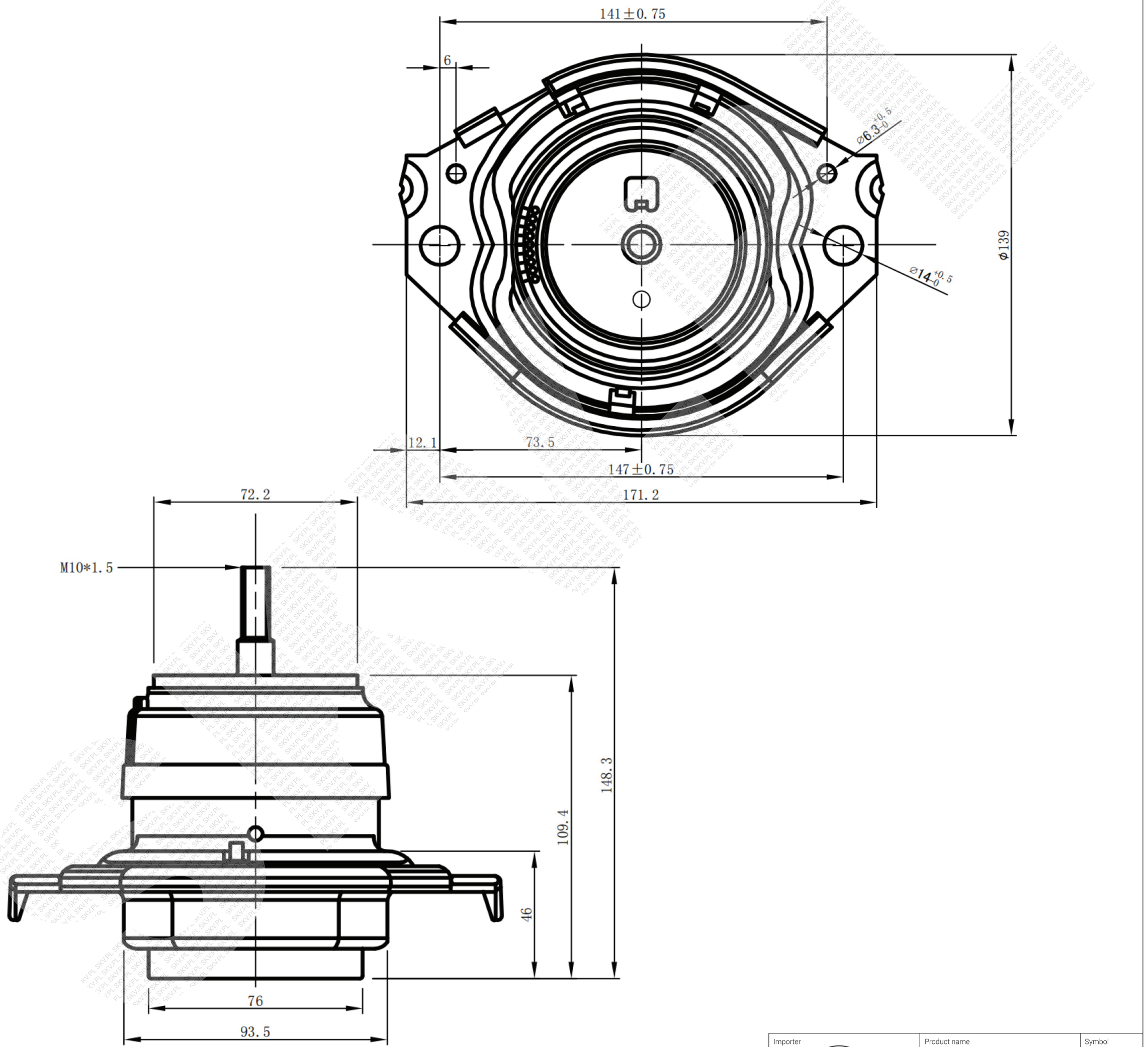

Importer ESEN Wojciech Michorzewski S.K.A. Papiezka 69, 87-800 Wloclawek, Poland info@skv.pl, www.skv.pl	Product name ENGINE MOUNT		Symbol 75SKV447
	OE Number 52124675AF	Diagram No 001	Date 11/2025