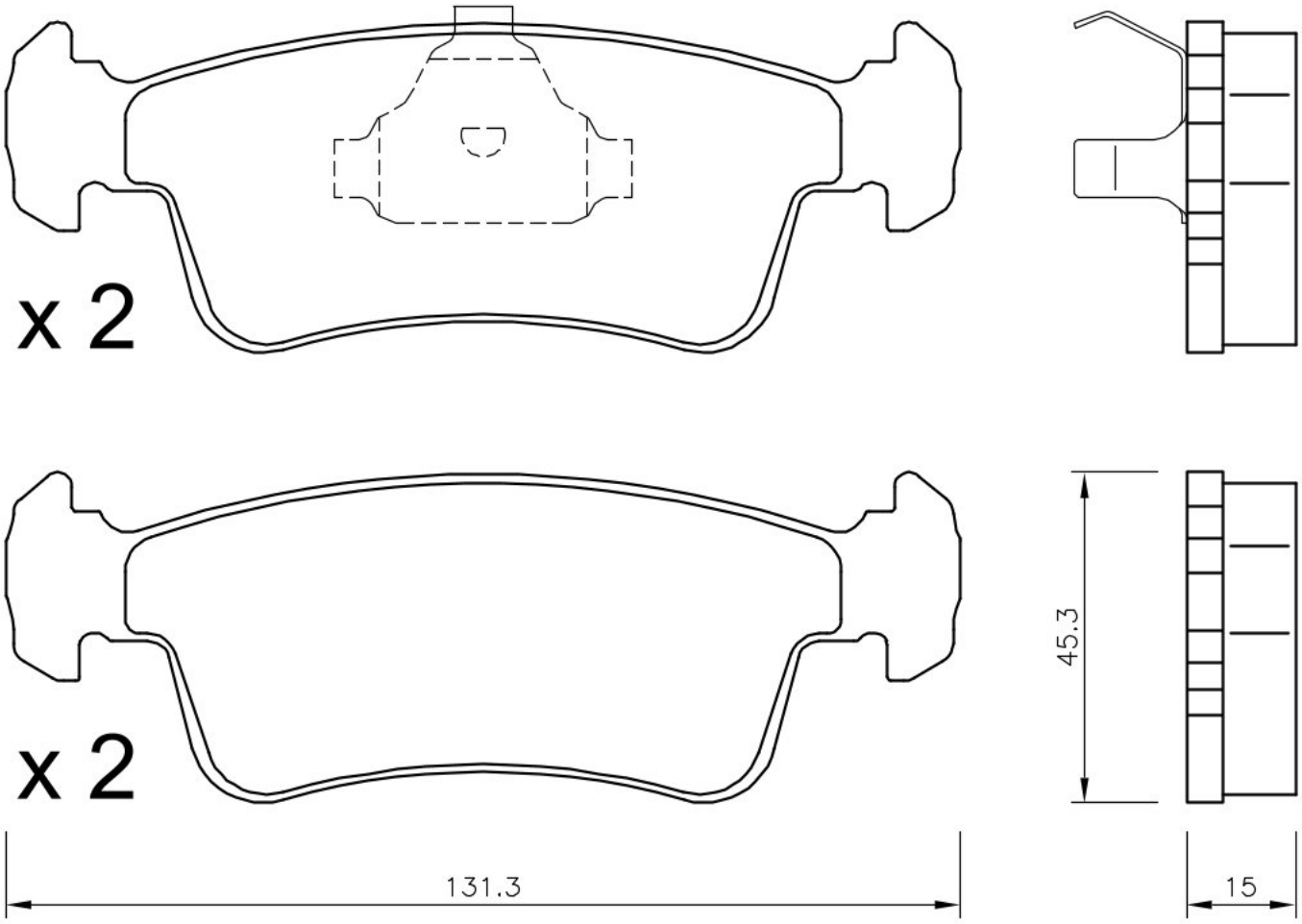
x 2
x 2
45.3
131.3
15