## Technical sheet / Datos técnicos:

| | |
|---|---|
| Part number adaptable to / Referencia adaptable a | 4640060000 |
| Operating pressure / Presión de trabajo | max. 13 bar |
| Max. working range / Rango máximo de trabajo | +/- 45º |
| Permissible medium / Medio de funcionamiento | Air / Aire |
| Operating temperature range / Rango de temperatura | -40˚C to / a +80˚C |
| Weight / Peso | 455 gr |

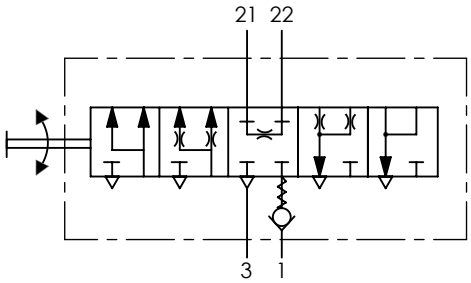


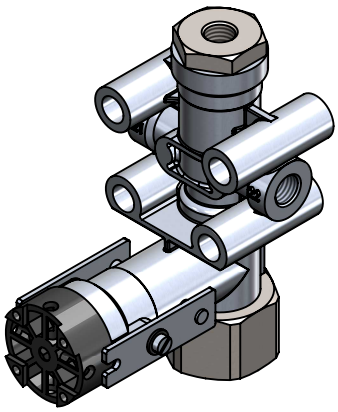

| Port / Conexión | Function / Función | Thread / Rosca |
|---|---|---|
| **1** | Supply / Alimentación | M12x1,5 |
| **21** | Delivery / Salida | M12x1,5 |
| **22** | Delivery / Salida | M12x1,5 |
| **3** | Exhaust / Escape | M12x1,5 |

**Purpose / Propósito:** The levelling valve controls the air in the air bellows ensuring proper vehicle stability. / La válvula niveladora controla el aire de los colchones de suspensión asegurando una estabilidad adecuada del vehículo.

**Installation requirements / Requisitos para la instalación:** The levelling valve is fastened to the chasis using two screws M8. To install the valve with the exhaust port facing downwards. Possibility of orienting the valve in four positions depending on the positioning of the lever. / La válvula niveladora se sujetará al chasis del camión por medio de dos tornillos M8. Instalar la válvula con el escape hacia abajo. Posibilidad de orientación de la válvula en cuatro posiciones dependiendo del posicionamiento de la varilla.

| Modification nº | Modified | Date | Reason | | |
|---|---|---|---|---|---|
| 4 | | | | Drawn | |
| 3 | | | | 22/09/15 A.U. | |
| 2 | | | | Checked | |
| 1 | | | | 22/09/15 A.L. | |
| Comments | | | | General Tolerance | Assembly: - |
| | | | | - | Part name: Leveling valve |
| | | | | Material | ID. Reference: 2214400 |
| | | | | - | Scale: - / Review: 0 |

cojali

Sheet 1/2

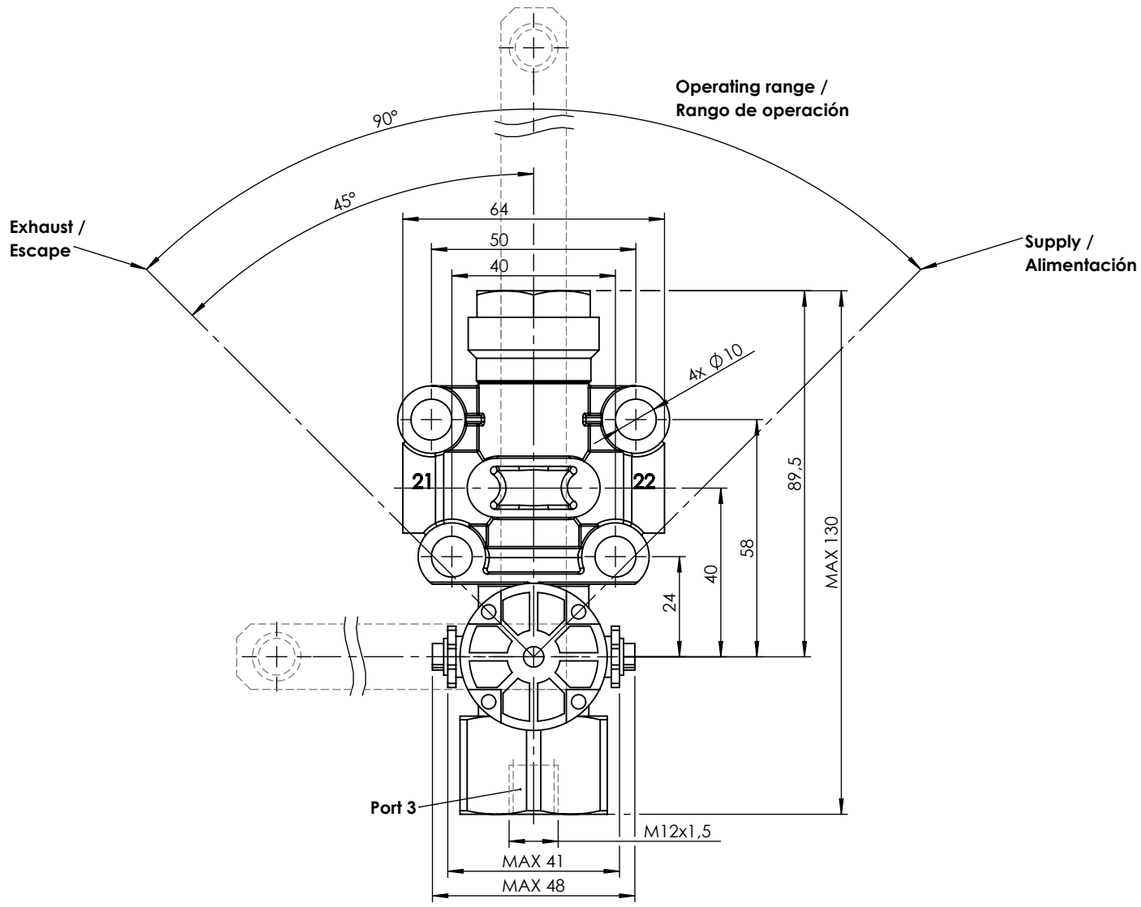


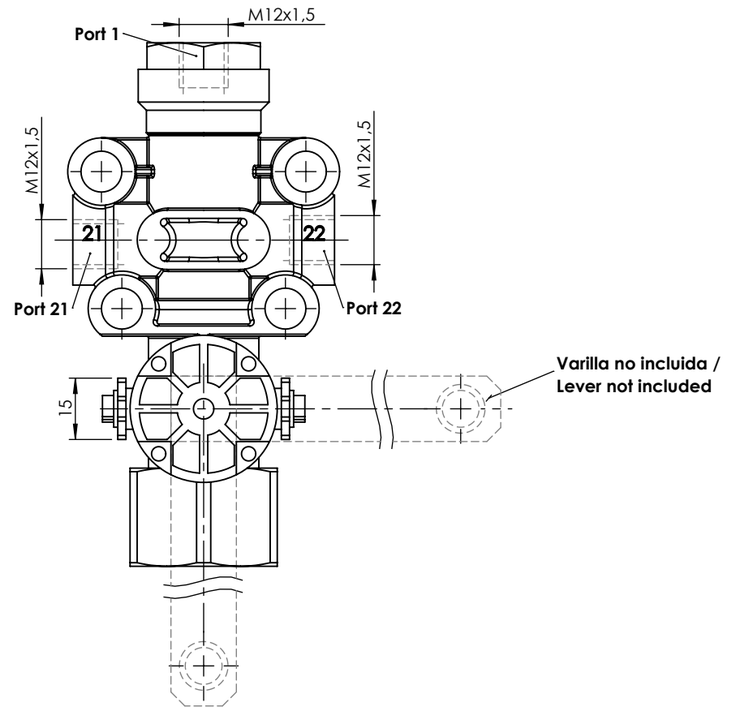


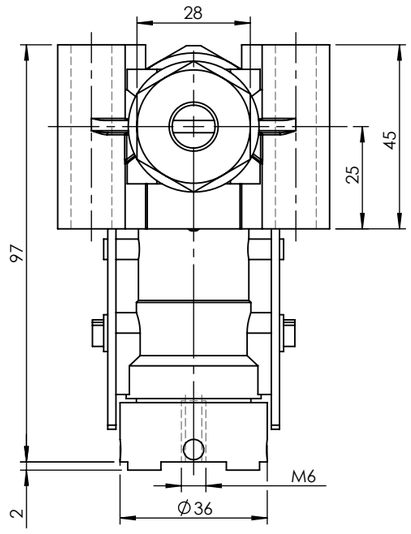


| Modification | | | | | | | |
|---|---|---|---|---|---|---|---|
| | 4 | | | | Drawn | cojali | |
| | 3 | | | | 22/09/15 A.U. | | |
| | 2 | | | | Checked | | |
| | 1 | | | | 22/09/15 A.L. | | |
| | nº | Modified | Date | Reason | General Tolerance | Assembly | - |
| Comments | | | | | ISO 2768 c-K | Part name | Leveling valve |
| | | | | | Material | ID. Reference | 2214400 |
| | | | | | - | Scale: 2/3 | Sheet 2/2 |
| | | | | | | Review: 0 | |