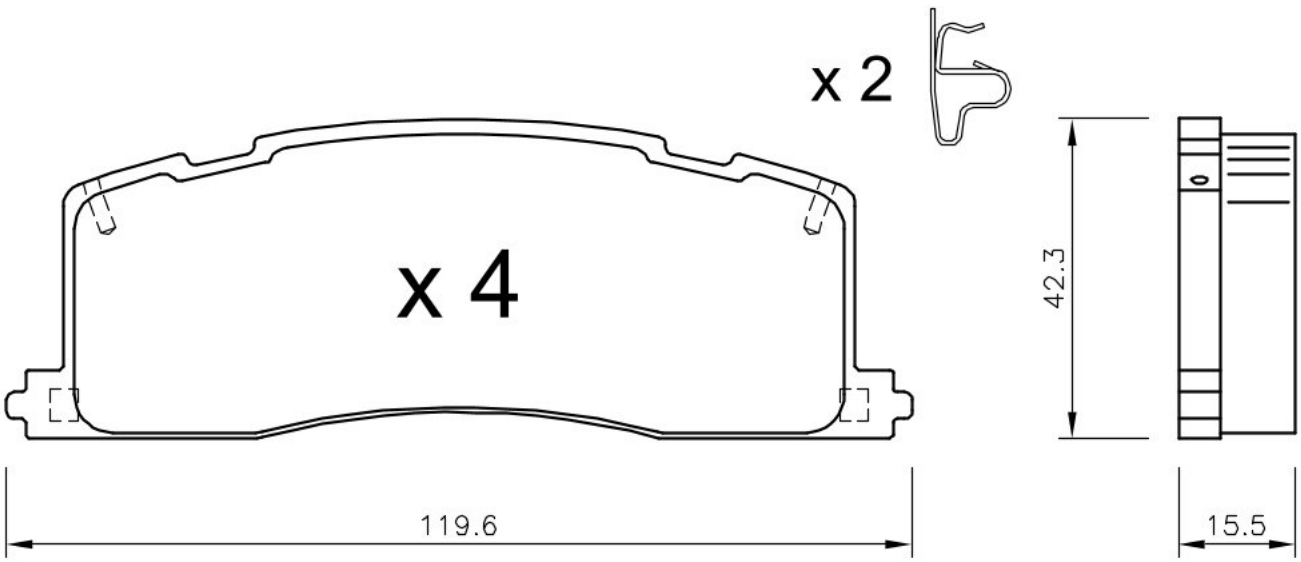
x 2
x 4
42.3
119.6
15.5