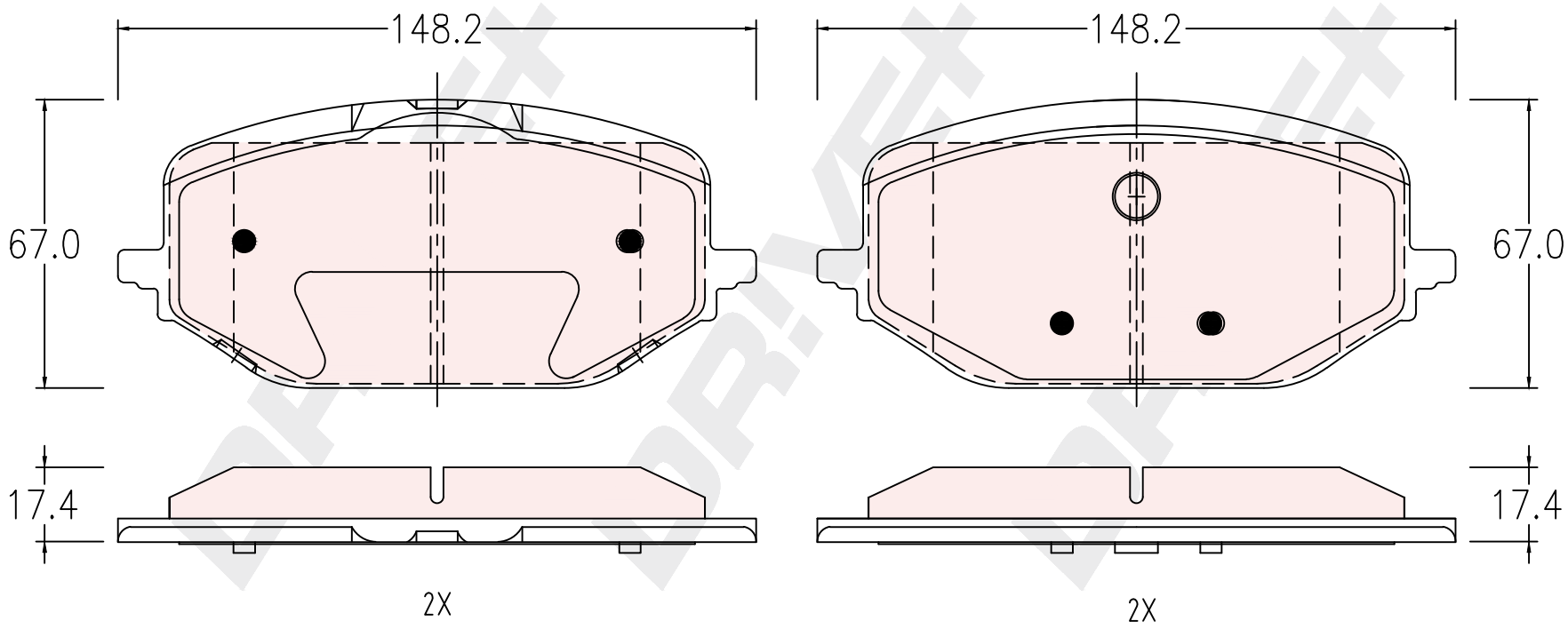

DP Number	Part Number	Drawing Version Number	Drawing Issue Date
DP1010.10.1611	DBP1611	V1	2025.11.27