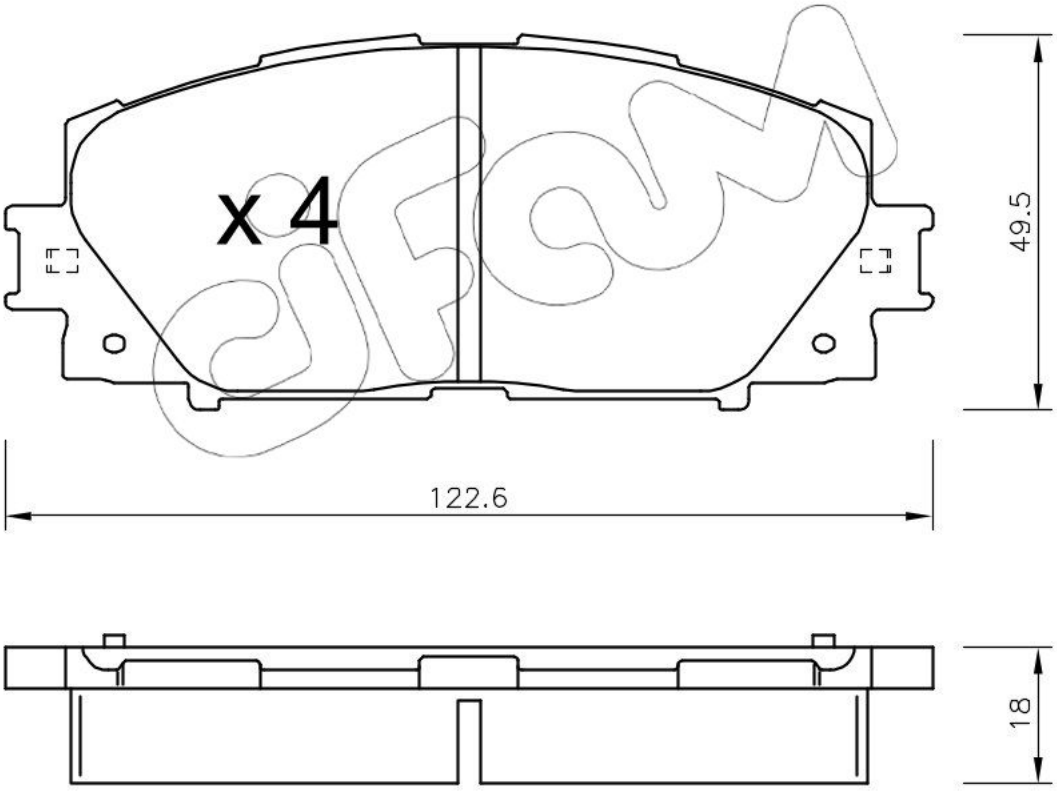
x 4
49.5
122.6
18