PRODUCT GROUP 76 SKV

SKV PROPSHAFTS

Aftermarket price, OE quality!

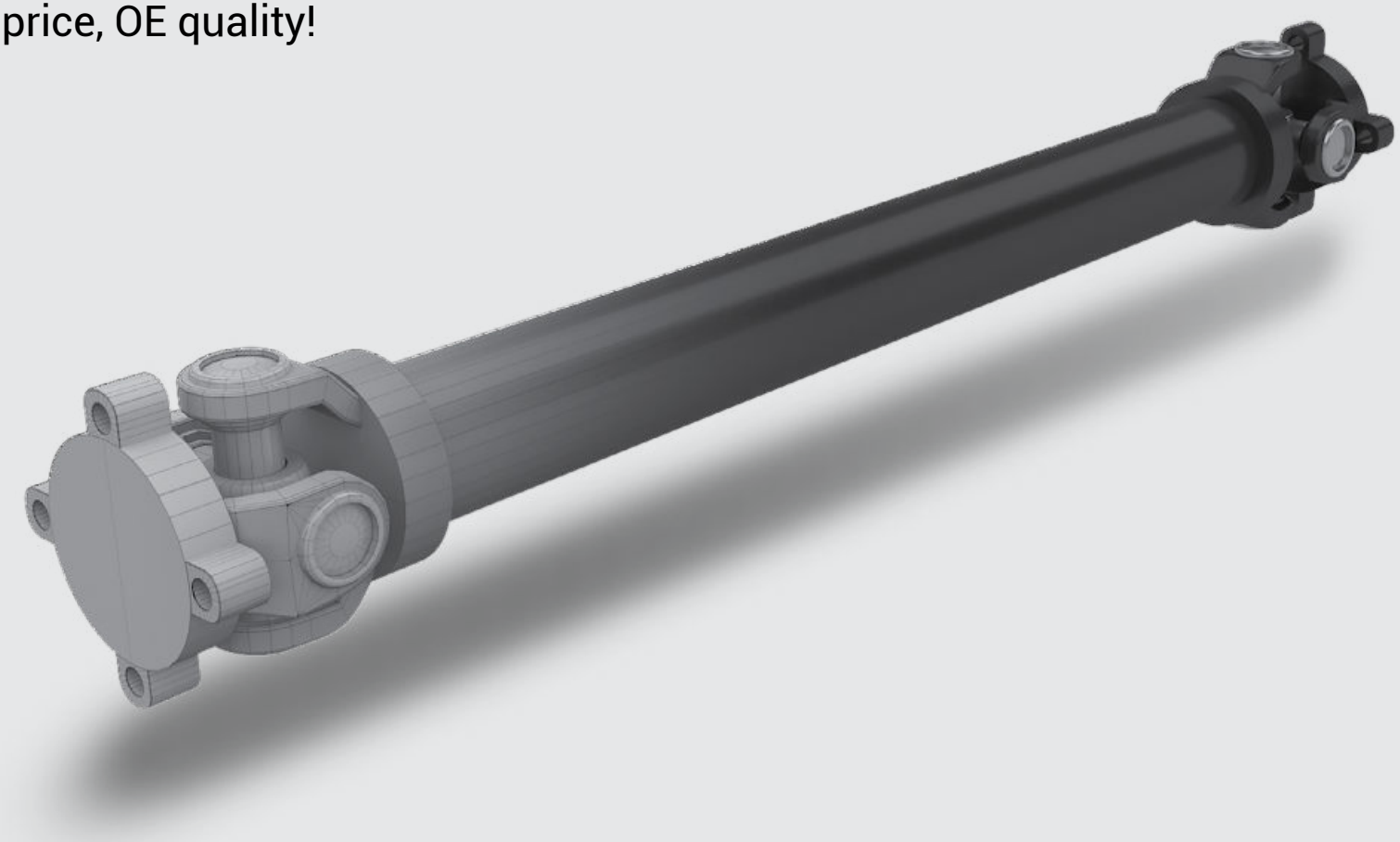

NEARLY 200 MODELS

Find at → www.skv.pl → Car selection → All parts → Axle Drive → Suspension, propshaft

Marketing materials of ESEN, owner of the SKV brand

AFTERMARKET PRICE - OE QUALITY SKV AUTO PARTS

SKV PROPSHAFTS

The propshaft is the main component of the vehicle's power transmission system, responsible for transferring torque from the gearbox to the differential and further to the wheels.

Propshafts are used in vehicles with different drive configurations. In rear-wheel drive cars, the propshaft connects the gearbox to the rear axle differential. In all-wheel drive vehicles, propshafts transfer torque to both axles—sometimes with several shafts working together. In off-road vehicles, propshafts must operate at large angles of deflection and are often equipped with universal joints and synchronizers. In commercial vehicles and trucks, they transmit high forces, which is why their design is much more robust and resistant to overload.

Advantages of SKV drive shafts

- Efficient power transmission – minimal torque losses between the engine and the wheels.
- Mechanical durability – a well-designed shaft can withstand heavy loads.
- Design flexibility – suitable for vehicles with different drivetrain layouts.
- Vibration damping – flexible joints and synchronizers improve driving comfort.

Propshafts are an integral part of the drivetrain in many types of vehicles, from city cars to off-road vehicles and trucks. Their design has evolved from simple steel constructions to lightweight, efficient composite solutions. To ensure robustness and comfort, it is important to regularly check the technical condition of the shaft and its joints - both in terms of wear and balance.



When should the propshaft be replaced?

- The universal joints or flexible joints are worn out and cannot be refurbished.
- The shaft is bent, cracked, or mechanically damaged (e.g., after hitting an obstacle).
- The centre bearings show excessive play or noise.
- The shaft is unbalanced and cannot be effectively rebalanced.
- The joint boots are damaged, and the joints have been operating without grease for an extended period.
- Repeated vibrations occur despite replacing other components of the drivetrain.

What characterises SKV propshafts:

NEARLY 200 MODELS

Nearly 200 models of propshafts

Perfect fit
Hassle-free Installation

High quality materials

3 YEARS WARRANTY

3 years warranty

TecDoc

TecDoc ID
4969

AFTERMARKET PRICE - OE QUALITY SKV AUTO PARTS

Find at → www.skv.pl → Car selection → All parts → Axle Drive → Suspension, propshaft

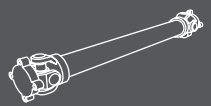

SKV PROPSHAFTS



Precise manufacturing
The careful and accurate manufacturing of SKV propshafts ensures their high quality and reliability.



Durable joints
Designed to withstand high torque and bending forces.



Proper heat treatment
Enhances hardness and wear resistance, thereby increasing the efficiency of SKV propshafts in power transmission.



Perfect fit
Ensures hassle-free installation and connection stability.



Certified steel
Specially selected steel forms the foundation of SKV propshaft construction.

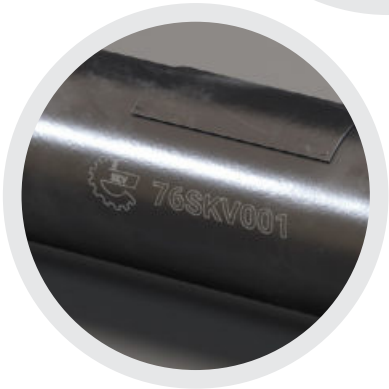

Product marking
Each SKV propshaft is labelled with the logo, symbol, and product batch number.

SKV propshafts are available in various versions depending on the type of vehicle and its power transmission system. Their design is adapted to the specific requirements of different vehicles-passenger cars, commercial vehicles, and off-road vehicles.

Rear-wheel drive vehicles
The propshaft connects the gearbox to the rear axle differential.



All-wheel drive vehicles
They transfer torque to both axles, sometimes using multiple propshafts.



Off-road vehicles
The propshafts must operate at large angles of deflection and are often equipped with universal joints and synchronizers.



A typical propshaft consists of the following components:

Steel or composite tube – the main structural element transmitting rotational forces.
Universal joints – allow operation at variable angles, especially during suspension movement.
Flexible joints – dampen vibrations and reduce noise.
Intermediate bearings – stabilize long propshafts in vehicles with a longer wheelbase.
Mounting flanges – enable connection to the gearbox, differential, or other drivetrain components.

Modern designs also use propshafts made of carbon fibre or composites to reduce weight and increase strength.

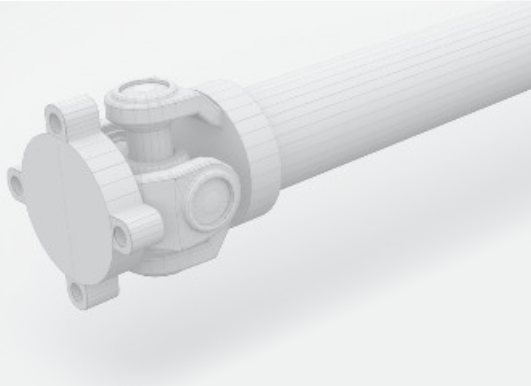

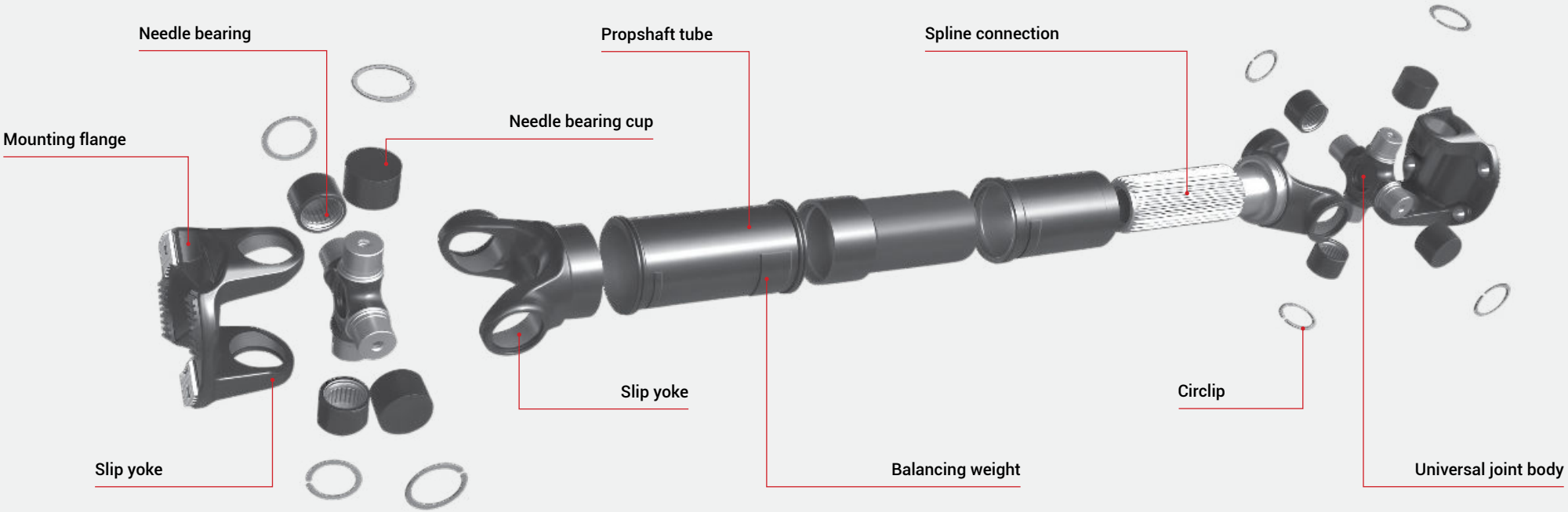

Logo | Part Name

Hologram confirming originality of the product



5 906302 211999

76SKV001

EAN-13 Barcode
Part Symbol

Logo | Symbol

For all propshaft models, we have diagrams with complete dimensions. You can find them on our website: **www.skv.pl**

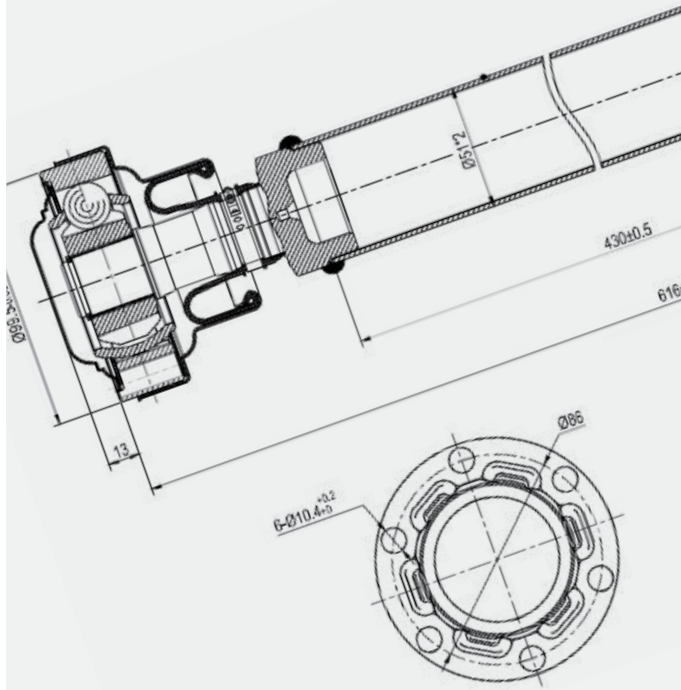

Among over 30,000 SKV car parts, you will find:

3 YEARS WARRANTY
The SKV brand offers
an **extended, free 3 years warranty.**
This warranty provides users
with **full protection** for parts
throughout the entire period.

SKV Product Index Structure.

76 SKV 00

- 76 — Category number
- SKV — Manufacturer code
- 00 — Product number



DRIVE SHAFTS



POWER
STEERING PUMPS



STEERING
KNUCKLES



BRAKE
HOSES



INTAKE
MANIFOLDS



CONTROL ARMS
AND SUSPENSION COMPONENTS



SWITCHES:
LIGHTS, WINDOWS, MIRRORS



HOSES:
TURBO, RADIATOR, INTAKE



LOCK BARRELS
/ IGNITION SWITCHES



WHEEL
HUBS



OIL
PANS

OVER 500
NEW ITEMS
MONTHLY
in existing and new
product groups.

Become a Part of SKV

The diverse SKV product range has been designed to maximise profitability for customers.

Join the SKV group and gain!

Free SKV brand advertising materials

Favourable cooperation terms with transparent conditions

Access to our purchasing platform: www.SKV.pl

Reliable supply chain

An average of over 500 new products per month

Free deliveries

Convenient payment terms

Service support



SKV parts are brand new:
- Manufactured according to the same rigorous manufacturing standards as OE parts
- Manufactured on the same production lines as leading global manufacturers
- Subjected to the same quality controls as OE parts

SKV – Aftermarket price, OE quality

ONLINE CATALOGUE

Call Us
+48 790 664 970

Email us
sales@skv.pl

Visit us
Papiezka 69 St.
Wloclawek, Poland

Check us out
www.skv.pl

www.skv.pl