Technical data/ Datos técnicos:

According to/En referencia a:	0504002112
Operating temperature range/ Rango de temperatura:	-40°C a/to 80°C
Weight/Peso:	224,5 gr

PIN 1	+5V
PIN 2	GND/MASA
PIN 4	SIGNAL/SEÑAL

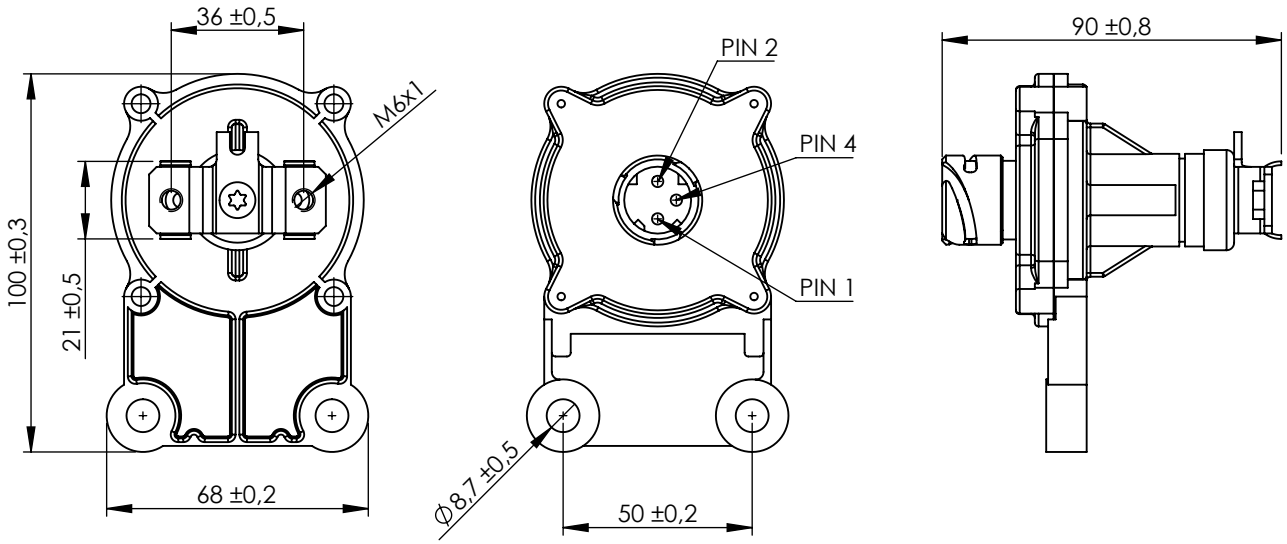

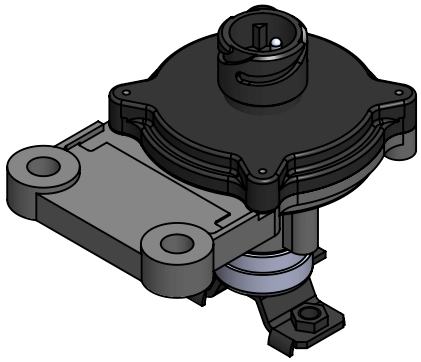

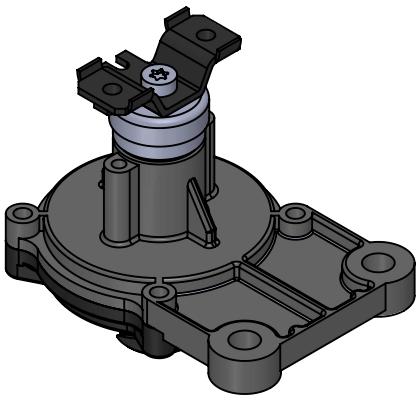

Modification							
nº	Modified	Date	Reason	General Tolerance	Assembly	-	
4					Drawn	cojali	
3					31/08/20 S.F.		
2					Checked		
1					31/08/20 E.L.		
Comments				ISO 2768 c-K	Part name	ECAS height sensor/Sensor de altura ECAS	
				Material	ID. Reference	2309101	
				-	Scale: 1/2		Sheet 1/1
					Review: 0		