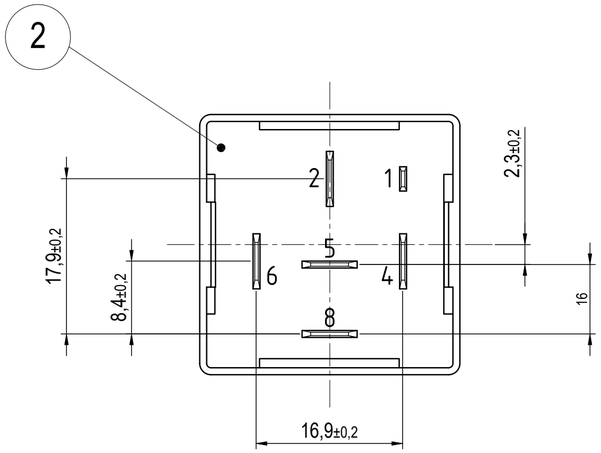

TERMINALS ARRANGEMENT

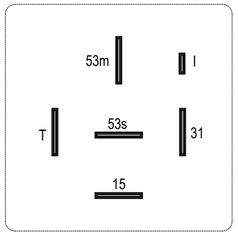

ACCORDING TO:
ISO 7588-1 (TERMINAL ASSIGNMENT)

TECHNICAL CHARACTERISTICS

RATED VOLTAGE	12V DC
RATED CURRENT	10A
MAXIMUM IMPULSIVE CURRENT	15A
OPERATING VOLTAGE	11V ÷ 16V
VOLTAGE DROP	MAX 150mV (@5A)
OPERATING TEMPERATURE	-40°C ÷ 85°C
INTERVAL PAUSE	5±1 sec
POST TIME IN WASH	2 TO 5 TURNS
PROTECTION INDEX	IP54

MATERIALS

N.	ELEMENT	MATERIAL	TREATMENT	COLOUR	NOTE
1	CASE	PA 66 GF30	-	BLACK	-
2	BASEPLATE	PA 66 GF30	-	BLACK	-
3	TERMINAL	CuZn37	Sn 5µm	GREY	-

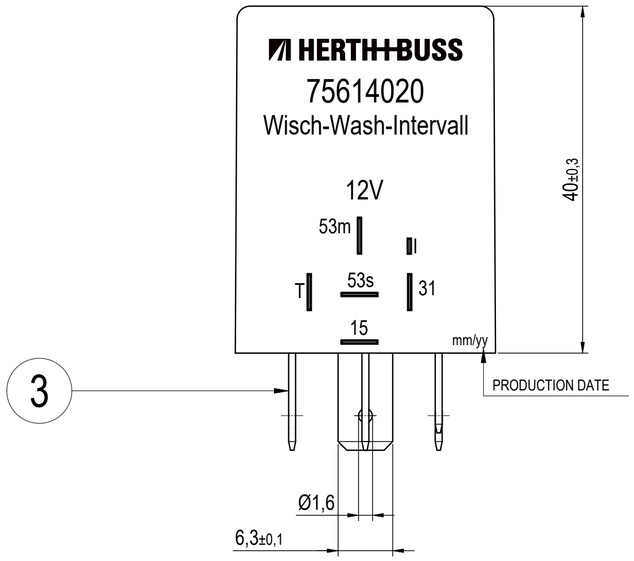

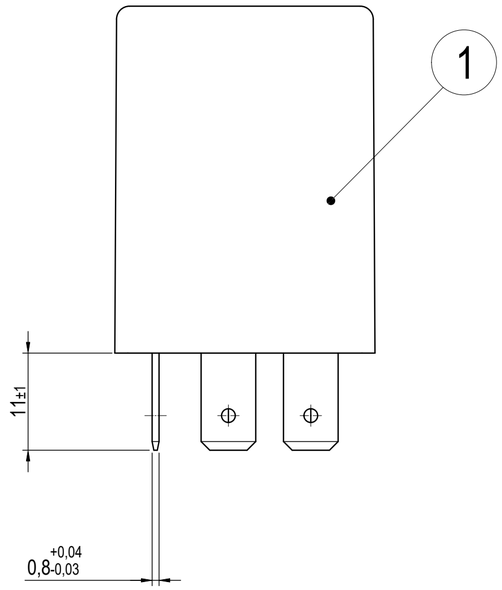

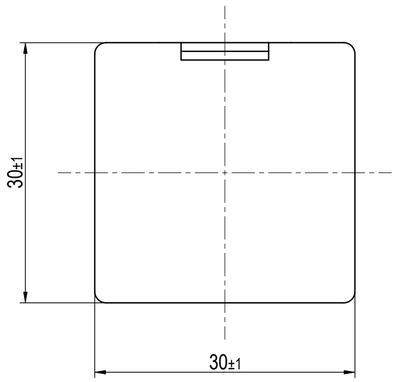

CONNECTION DIAGRAM:

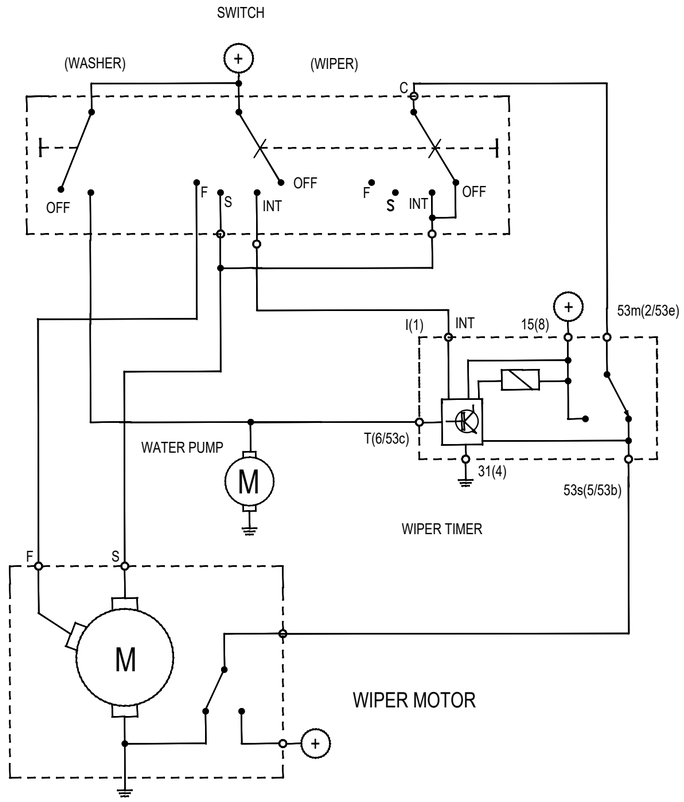

GENERAL TOLERANCES ACCORDING TO ISO 2768-mH

ALL PROPRIETARY RIGHTS RESERVED. THE COMPANY ASSERTS ONE'S RIGHTS ACCORDING TO THE LAW.
THIS DRAWING SHALL NOT BE REPRODUCED OR IN ANY WAY UTILIZED TO MAKE COMPONENTS AND IT MUST NOT BE RELEASED TO OTHER PARTIES WITHOUT WRITTEN CONSENT.

HERTH+BUSS

TITLE		WEIGHT	SCALE
WIPER RELAY UNIT 12V 6P | WIP. TIME 5 SEC		49 g	2 : 1
PART NUMBER	REV.	SIZE	SHEET
75614020	0	A2	1 / 1

REVISIONS

REV.	DESCRIPTION	COORDINATES	DATE