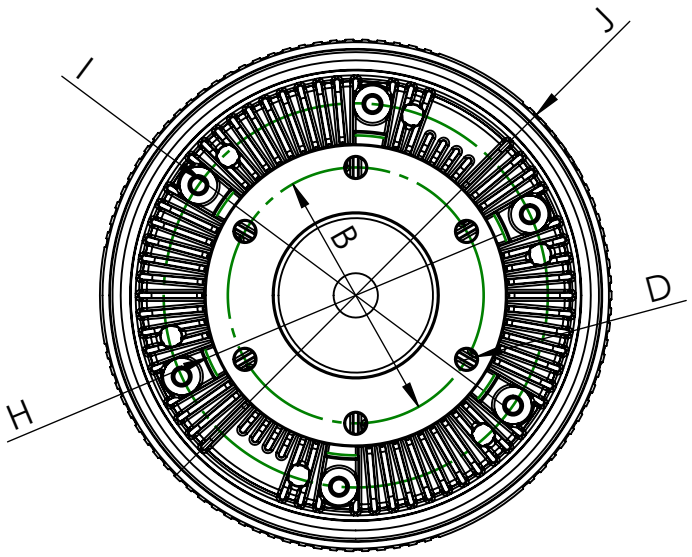

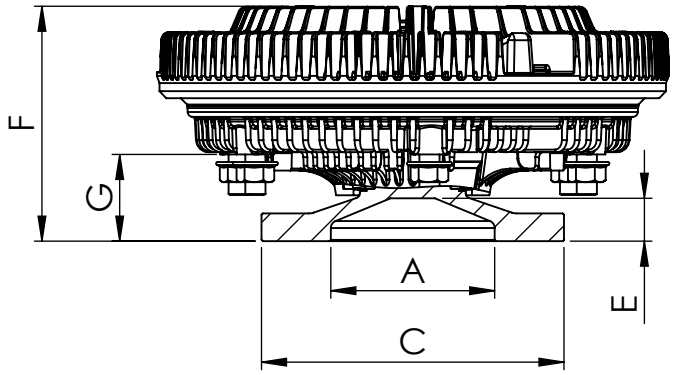

Dimensional values

INPUT SHAFT				FAN CLUTCH			
Ref. nº	**Value**	**Ref. nº**	**Value**	**Ref. nº**	**Value**	**Ref. nº**	**Value**
A	∅65 H8 mm			F	93,2 ±1 mm		
B	∅101,5 mm			G	34,4 ±0.5 mm		
C	∅120 mm			H	∅127 0 -0.3 mm		
D	6x M10x1,5			I	∅152,4 ±0.5 mm		
E	17 ±2 mm			J	∅203 mm		

Modification nº	Modified	Date	Reason
4			
3			
2			
1			

Comments

Drawn	05/06/20 S.F.
Checked	05/06/20 A.D.
General Tolerance	ISO 2768 c-K
Material	
Assembly	Technical sheet
Part name	Fan clutch
ID. Reference	8521128
Scale: 1/3	**Sheet 1/1**
Review: 0	

cojali