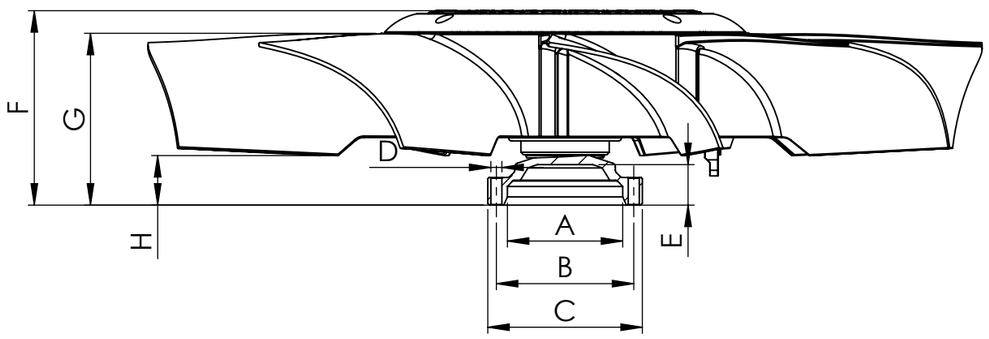

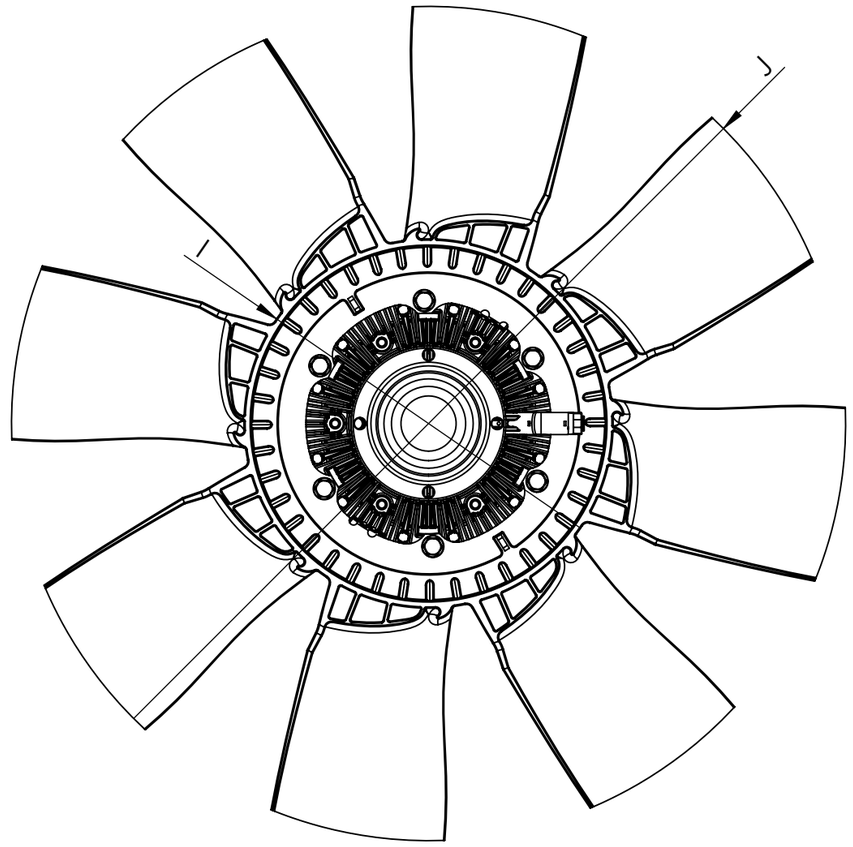

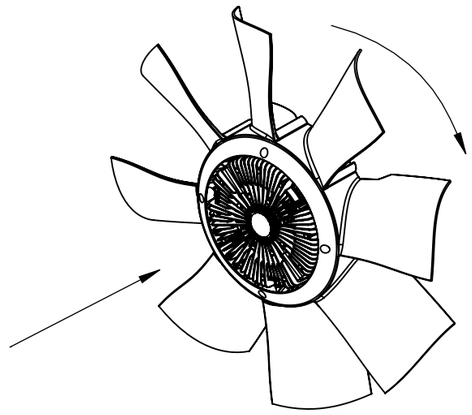

Dimensional values

INPUT SHAFT

Ref.nº	Value	Ref.nº	Value
A	∅94 H8 mm		
B	∅112 mm		
C	∅126 mm		
D	4x ∅9 mm		
E	33 ± 2 mm		

FAN CLUTCH WHEEL

Ref.nº	Value	Ref.nº	Value
F	158.5 ± 1 mm		
G	140.8 ± 3 mm		
H	39.8 ± 3 mm		
I	∅301 ± 3 mm		
J	∅680 ± 3 mm		
Number of blades	8	Configuration	CW

Modification nº	Modified	Date	Reason
4			
3			
2			
1	J.S.	29/04/20	Change sheet format and review dimensions

Comments

Drawn	09/04/18 J.S.
Checked	09/04/18 A.C.
General Tolerance	ISO 2768 c-K
Material	

cojali

Assembly	Technical sheet
Part name	Fan clutch wheel
ID. Reference	7085414
Scale: 1/5	**Sheet 1/1**
Review: 1	