PRODUCT GROUP 75 SKV

# SKV ENGINE AND GEARBOX MOUNTS

Aftermarket price, OE Quality!

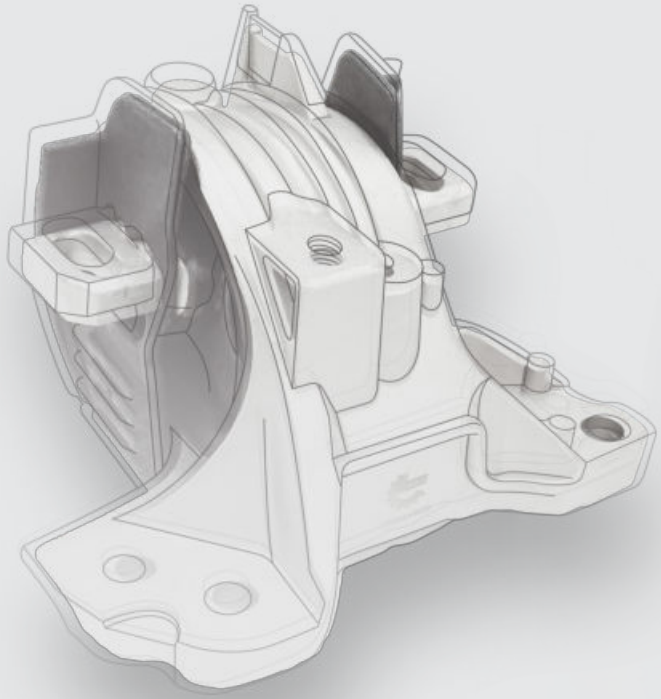



OVER 400 MODELS




Find at → www.skv.pl → Vehicle selection → All parts → Engine suspension → Engine bearing

Find at → www.skv.pl → Vehicle selection → All parts → Automatic gearbox → Mounting, automatic gearbox

Find at → www.skv.pl → Vehicle selection → All parts → Manual gearbox → Mounting, manual gearbox

Marketing materials of ESEN, owner of the SKV brand

AFTERMARKET PRICE - OE QUALITY SKV AUTO PARTS

# SKV ENGINE AND GEARBOX MOUNTS



**Engine and gearbox mounts are mounting components whose primary function is to dampen vibrations. They serve similar roles in the vehicle's drivetrain but differ in design, placement, and specific performance characteristics.**

## FUNCTION IN THE VEHICLE

**Engine mounts:** Their main task is to stabilise the engine and dampen vibrations generated by its operation. They reduce the transmission of vibrations to the chassis, improve ride comfort, and protect structural components of the vehicle from dynamic overloads.

**Gearbox mounts:** They stabilise the gearbox in the correct position relative to the drivetrain. They help absorb vibrations resulting from the transmission's operation and gear changes, preventing excessive strain on mounts and the propshaft.

## PLACEMENT

**Engine mounts:** Usually installed on the sides of the engine or underneath it, depending on the vehicle design. Their placement is crucial for an even distribution of dynamic forces.

**Gearbox mounts:** Usually located at the rear part of the gearbox, or where the gearbox is connected to the vehicle frame. In transverse mount systems, they are closer to the central axis of the vehicle.



**What characterises engine and gearbox mounts:**

- OVER 400 MODELS — Engine and gearbox mounts
- **Position stabilisation** of gearbox/engine
- **High-Quality Materials**
- **Excellent shock absorption**
- 3 YEARS WARRANTY — **3 years** warranty
- Noise and vibration reduction
- TecDoc — **TecDoc ID** 4969

AFTERMARKET PRICE - OE QUALITY SKV AUTO PARTS

Find at → www.skv.pl → Vehicle selection → All parts → Engine suspension → Engine bearing

Find at → www.skv.pl → Vehicle selection → All parts → Automatic gearbox → Mounting, automatic gearbox

Find at → www.skv.pl → Vehicle selection → All parts → Manual gearbox → Mounting, manual gearbox

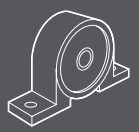

# SKV ENGINE AND GEARBOX MOUNTS



**Both engine and gearbox mounts are exposed to significant loads and gradual wear. To extend their lifespan, it is advisable to avoid sudden manoeuvres, regularly check the condition of the powertrain suspension, and ensure the proper functioning of the engine and transmission. Professional installation and the use of high-quality SKV components significantly contribute to the durability of these elements.**

**Signs of worn engine mounts:** Increased vibrations in the cabin, knocking sounds from the engine bay, or the engine shifting from its original position.

**Signs of worn gearbox mounts:** Difficulty changing gears, excessive transmission noise, or misalignment of the driveshaft, resulting in uneven operation of the drivetrain.



## CAUSES OF RAPID WEAR OF ENGINE AND GEARBOX MOUNTS

**Excessive dynamic loads:** Intense driving, rapid acceleration, sudden braking, aggressive gear shifting, and driving on uneven surfaces can cause accelerated wear of elastomer components.

**Incorrect installation:** Installation errors or the use of inappropriate components can introduce additional stresses, leading to premature damage.

**Overheating and material aging:** Extreme temperature conditions can weaken the structure of rubber or elastomer, accelerating its degradation process.

**Improper maintenance:** Neglecting regular inspections and replacement of damaged components increases the risk of problems with the engine suspension.

**Engine and drivetrain vibrations:** A faulty ignition system, exhaust components, or an unbalanced driveshaft can contribute to abnormal vibrations, which lead to faster wear of the mounts.

**Leaking operational fluids:** Gearbox oil can degrade the rubber of the mount. Contact with lubricants and chemicals may cause the mount to crack or deform.

Engine mounts and gearbox mounts are key components of the mounting system, but they serve different functions and are designed to withstand different types of loads. Engine mounts are more technologically advanced due to the need to absorb strong vibrations, whereas gearbox mounts are primarily focused on stabilising the transmission and reducing the impact of gear changes on the vehicle's structure.

# SKV ENGINE MOUNTS



**SKV engine mounts are made from the highest quality materials.**

They are available in rubber, hydraulic, and active versions. Modern engine mounts may contain damping fluids (hydraulic) or elements that dynamically change damping characteristics.

**Construction of a hydraulic mount with variable damping characteristics**

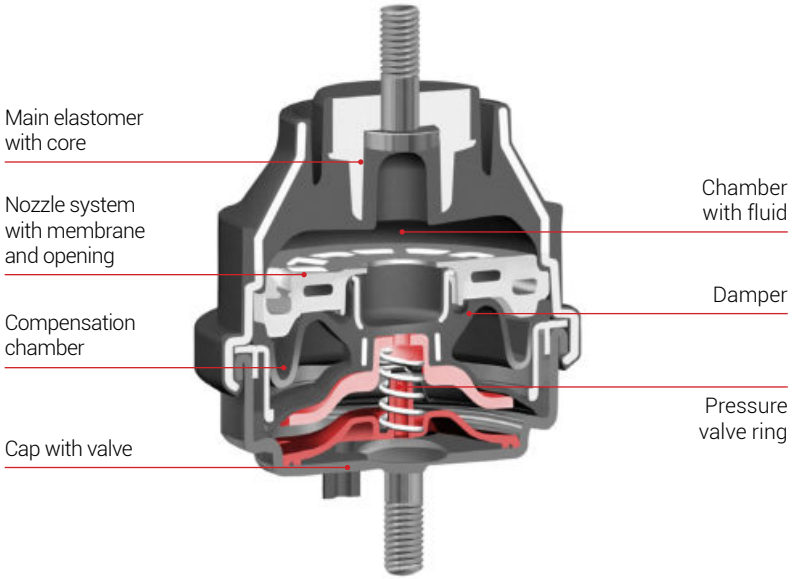


**Construction of a hydraulic mount with a single-stage damping**

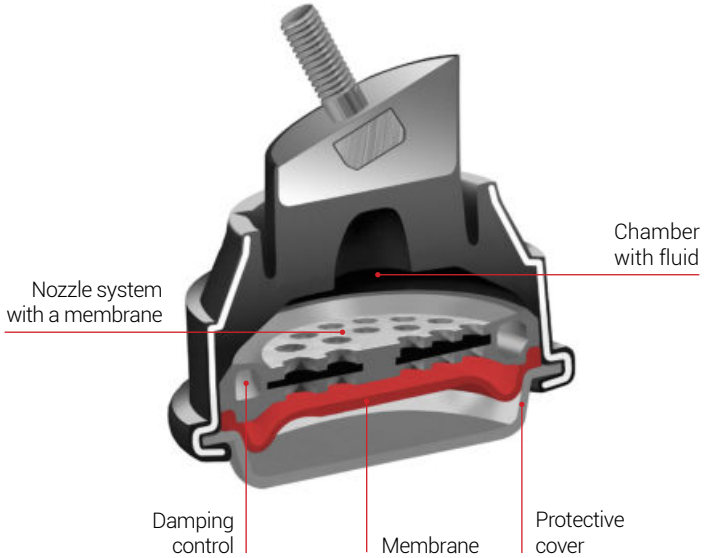


**Examples of SKV Engine Mounts**



SKV Engine Mount
ref. **75SKV005**




SKV Engine Mount
ref. **75SKV001**



SKV Engine Mount
ref. **75SKV017**

Find at → www.skv.pl → Vehicle selection → All parts → Engine suspension → Engine bearing

Find at → www.skv.pl → Vehicle selection → All parts → Automatic gearbox → Mounting, automatic gearbox

Find at → www.skv.pl → Vehicle selection → All parts → Manual gearbox → Mounting, manual gearbox

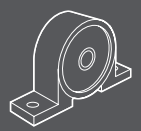

# SKV GEARBOX MOUNTS



**Reliable and durable SKV gearbox mounts come with a 3-year warranty.**

They are generally simpler in construction than engine mounts and are often made of metal and rubber or polyurethane.
They do not need to absorb as much dynamic force as engine mounts, but they must ensure precise positioning of the gearbox.

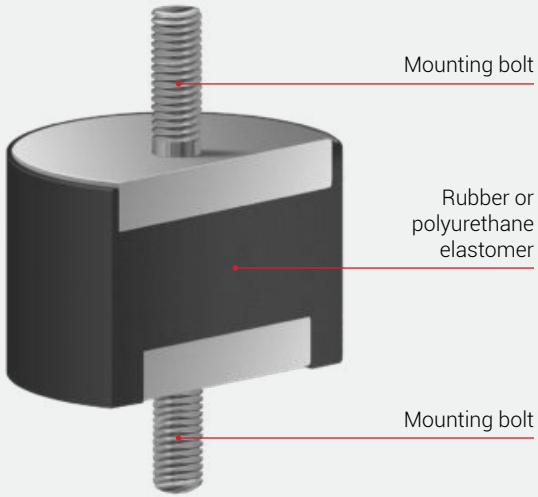


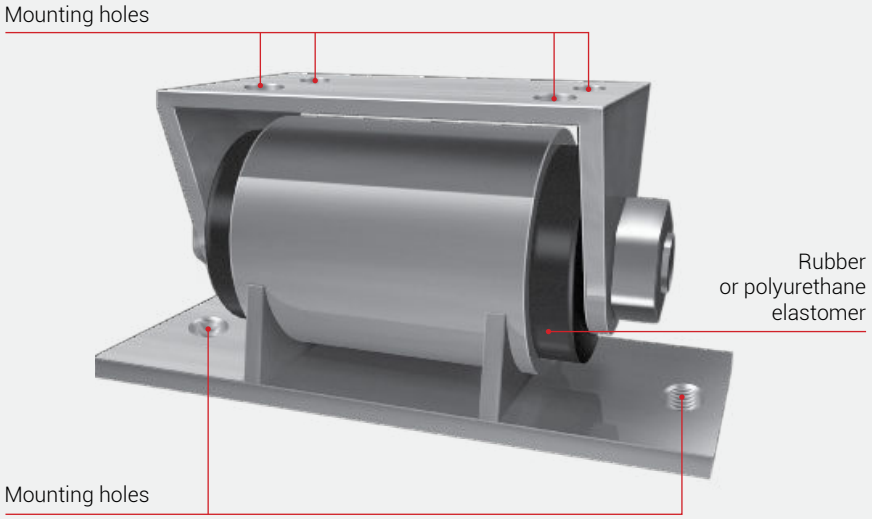


**Examples of SKV Gearbox Mounts**



SKV Gearbox Mount
ref. **75SKV800**



SKV Gearbox Mount
ref. **75SKV822**



SKV Gearbox Mount
ref. **75SKV804**

group 75 SKV

Find at → www.skv.pl → Vehicle selection → All parts → Engine suspension → Engine bearing
Find at → www.skv.pl → Vehicle selection → All parts → Automatic gearbox → Mounting, automatic gearbox
Find at → www.skv.pl → Vehicle selection → All parts → Manual gearbox → Mounting, manual gearbox

# SKV ENGINE AND GEARBOX MOUNTS

Logo | Part Name




Logo | Symbol




Hologram confirming originality of the product

EAN-13 Barcode Part Symbol

5 906302 211999

**75SKV050**

For all models of engine and gearbox mounts, we provide diagrams with full dimensions. You can find them on our website: **www.skv.pl**

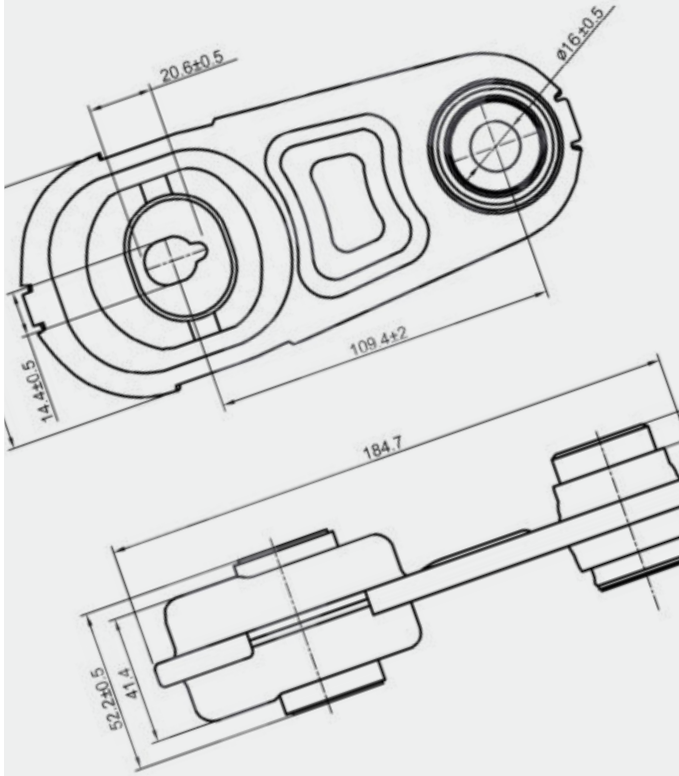


AFTERMARKET PRICE - OE QUALITY
SKV
AUTO PARTS

Find at → www.skv.pl → Vehicle selection → All parts → Engine suspension → Engine bearing

Find at → www.skv.pl → Vehicle selection → All parts → Automatic gearbox → Mounting, automatic gearbox

Find at → www.skv.pl → Vehicle selection → All parts → Manual gearbox → Mounting, manual gearbox

# Among over 30,000 SKV car parts, you will find:

**3 YEARS WARRANTY**
The SKV brand offers
an **extended, free 3 years warranty.**
This warranty provides users
with **full protection** for parts
throughout the entire period.

SKV Product Index Structure.

75 SKV 00X

- 75 — Category number
- SKV — Manufacturer code
- 00X — Product number



DRIVE SHAFTS



POWER
STEERING PUMPS



STEERING
KNUCKLES



BRAKE
HOSES



INTAKE
MANIFOLDS



CONTROL ARMS
AND SUSPENSION COMPONENTS



SWITCHES:
LIGHTS, WINDOWS, MIRRORS



HOSES:
TURBO, RADIATOR, INTAKE



LOCK BARRELS
/ IGNITION SWITCHES



WHEEL
HUBS



OIL
PANS

OVER 500
NEW ITEMS
MONTHLY
in existing and new
product groups.

group 75 SKV

Find at → www.skv.pl → Vehicle selection → All parts → Engine suspension → Engine bearing

Find at → www.skv.pl → Vehicle selection → All parts → Automatic gearbox → Mounting, automatic gearbox

Find at → www.skv.pl → Vehicle selection → All parts → Manual gearbox → Mounting, manual gearbox

# Become a Part of SKV

The diverse SKV product range has been designed to maximise profitability for customers.

**Join the SKV group and gain!**

- **Free SKV brand advertising materials**
- **Favourable cooperation terms with transparent conditions**
- **Access to our purchasing platform: www.SKV.pl**
- **Reliable supply chain**
- **An average of over 500 new products per month**
- **Free deliveries**
- **Convenient payment terms**
- **Service support**




**SKV parts are brand new:**

- Manufactured according to the same rigorous manufacturing standards as OE parts
- Manufactured on the same production lines as leading global manufacturers
- Subjected to the same quality controls as OE parts

## SKV – Aftermarket price, OE quality



ONLINE CATALOGUE

AFTERMARKET PRICE - OE QUALITY
SKV
AUTO PARTS

Call Us
+48 790 664 970

Email us
sales@skv.pl

Visit us
Papiezka 69 St.
Wloclawek, Poland

Check us out
www.skv.pl

www.skv.pl