Involute Spline Parameter		
Parameter	Symbol	Value
Modulus	m	1
No. of Teeth	Z	25
Pressure Angle	α_D	45°
Pitch D.	D	Ø25

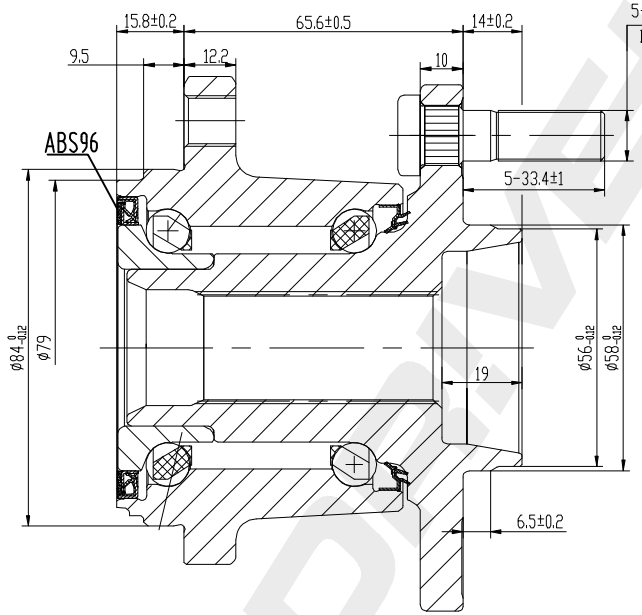

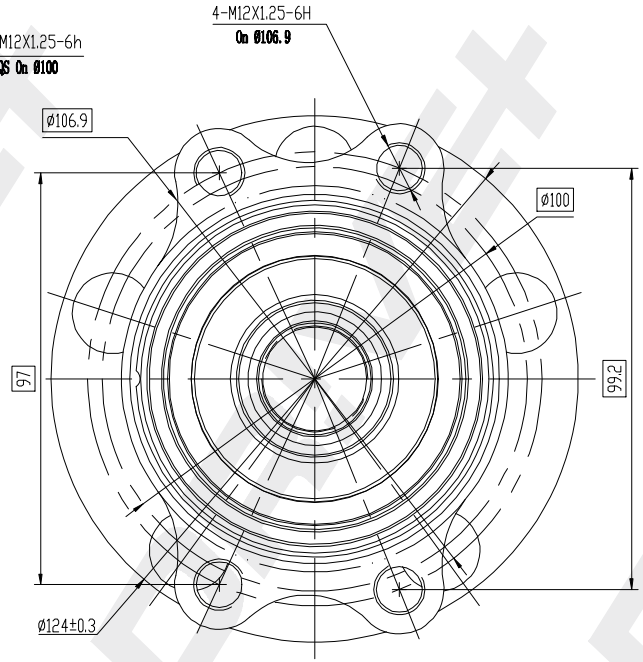

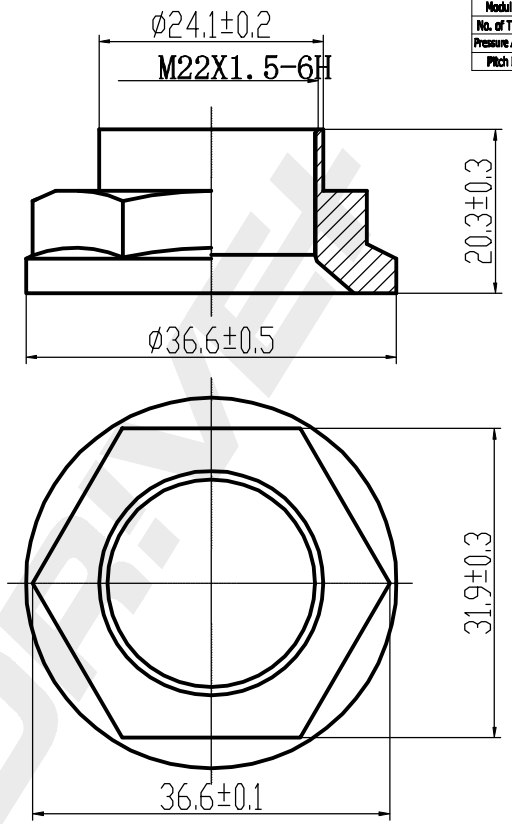

NUT

1pcs Galvanizing

DP Number	Part Number	Drawing Version Number	Drawing Issue Date
DP2010.10.0213	DRW0213	V1	2025.08.15

DRIVE+