

SECTION A-A

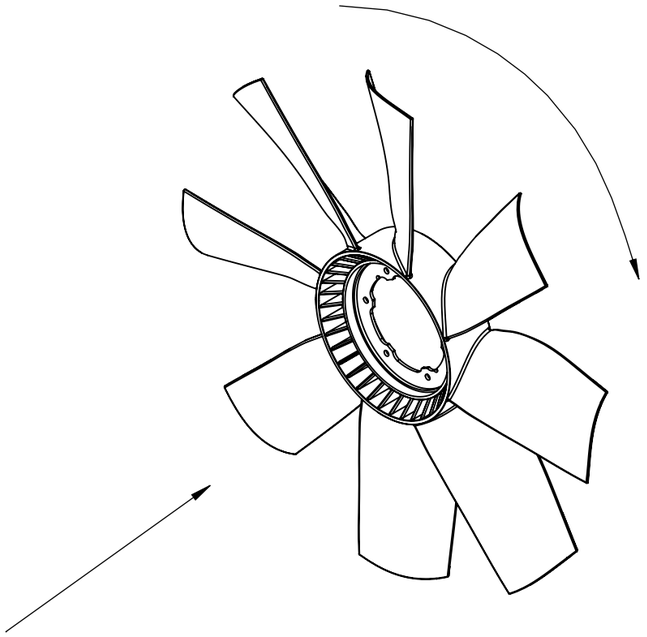

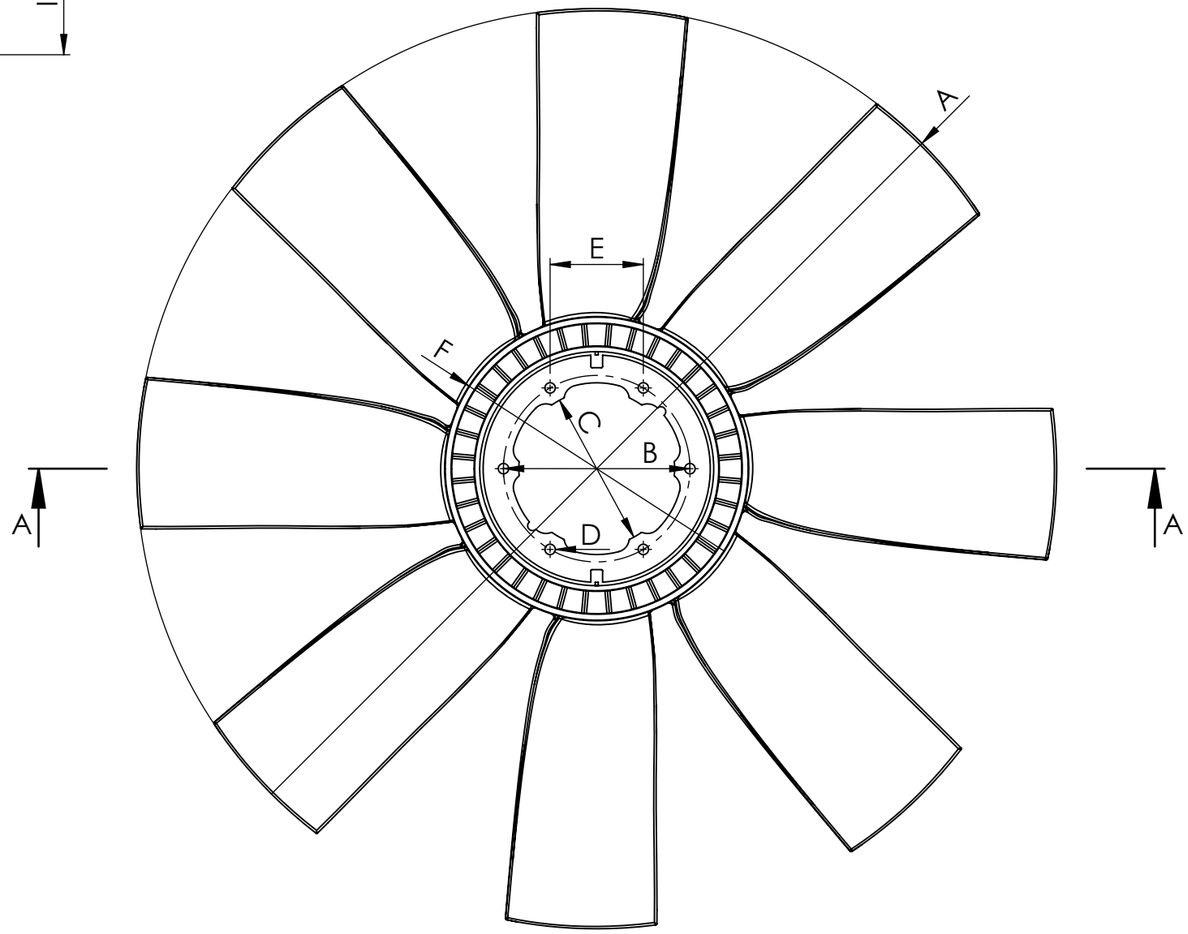

Dimensional values

FAN WHEEL

Ref.nº	Value	Ref.nº	Value
A	∅750 ±3 mm	G	79 ±3 mm
B	∅152.4 mm	H	38.6 ±3 mm
C	∅127 +0.3 0 mm	I	83.2 ±3 mm
D	6x ∅8.5 mm		
E	76.2 mm		
F	∅248 ±3 mm		
Number of blades	8	Configuration	CW

Modification				
nº	Modified	Date	Reason	
4				
3				
2				
1				

Comments

Drawn	18/05/20 A.G.
Checked	18/05/20 R.U.
General Tolerance	ISO 2768 c-K
Material	

cojali

Assembly	Technical sheet
Part name	Fan wheel
ID. Reference	7087119
Scale: 1/5	**Sheet 1/1**
Review: 0	