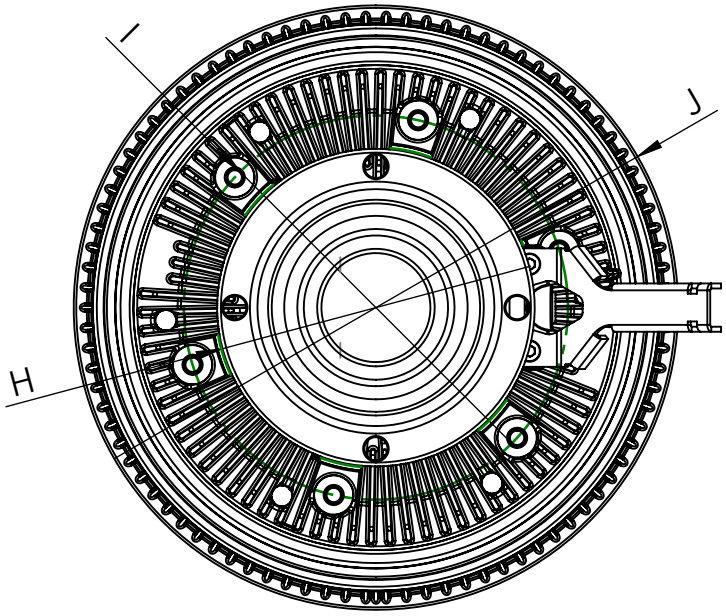

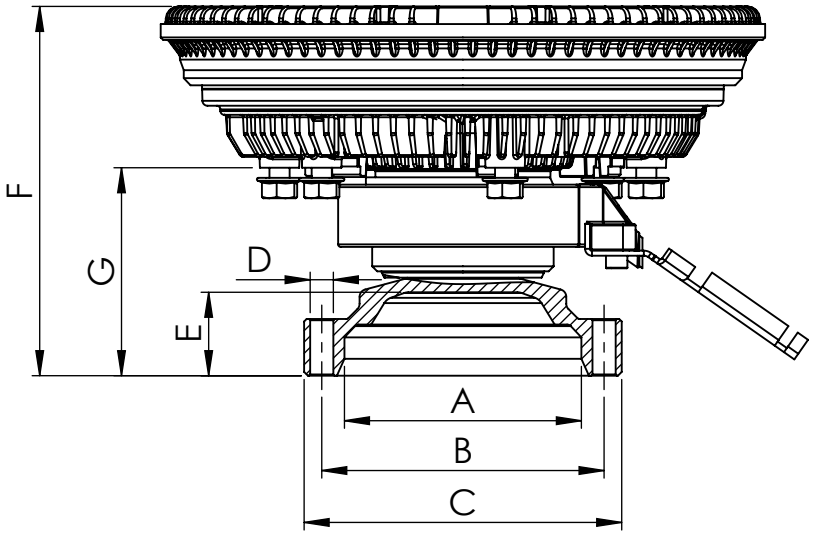

Dimensional values

INPUT SHAFT				FAN CLUTCH			
Ref. nº	**Value**	**Ref. nº**	**Value**	**Ref. nº**	**Value**	**Ref. nº**	**Value**
A	∅94 H8 mm			F	146.4 ±1 mm		
B	∅112 mm			G	82.4 ±0.5 mm		
C	∅126 mm			H	∅127 0 -0.3 mm		
D	4x ∅9.2 mm			I	∅152.4 ±0.5 mm		
E	33.1 ±2 mm			J	∅239.8 mm		

Modification						
nº	**Modified**	**Date**	**Reason**	**General Tolerance**	**Assembly**	Technical sheet
4					**Drawn**	cojali
3					05/05/20 S.F.	
2	A.G.	23/11/20	Modify the bottom of the shaft.		**Checked**	
1	A.G.	01/10/20	Modify the bottom of the shaft.		05/05/20 A.D.	
Comments				ISO 2768 c-K	**Part name**	Fan clutch
				Material	**ID. Reference**	7083419
					Scale: 1/3	**Sheet 1/1**
					Review: 2	