OE#TAKEN AS REFERENCE: BCYA-26-43Z

BILL OF MATERIALS & COMPONENTS

Nr	FT CODE	DESCRIPTION	Q.TY
1	**FT#C**	Friction compound for passenger cars	–
	– Friction material: 11 – Identification letter: C – Friction coefficient: according to ISLB–28 – Shear resistance: according to ISLB–17 – Compressibility: according to ISLB–30 – Density: according to ISLB–19 – Hardness: according to ISLB–18 – Friction material surface: **2.543,6** mm² – General tolerances: ±0.5		
2	FT#U	Underlayer compound	–
	– Identification letter: U – Color: black or red – Friction coefficient: according to ISLB–28 – Shear resistance: according to ISLB–17 – Compressibility: according to ISLB–30 – Hardness: according to ISLB–18 PAD TH ≤ 10mm --> FT#U TH MAX= 2,5mm PAD TH ≤ 10mm --> FT#U TH min= 1,5mm 10mm < PAD TH ≤ 24mm --> FT#U TH MAX= 3,5mm 10mm < PAD TH ≤ 24mm --> FT#U TH min= 2mm PAD TH > 24mm --> FT#U TH MAX= 4,5mm PAD TH > 24mm --> FT#U TH min= 3mm		
3	C.8523	Pre–coating water based adhesive	–
	– Color: black – Shear resistance: according to ISLB–17 Plate surface ≤ 100cm² --> 2,50mg/cm² ÷ 5,50mg/cm² Plate surface > 100cm² --> 8,50mg/cm² ÷ 11,00mg/cm²		
4	MC.002	Powder paint	–
	– Color: black Thickness = 40 ÷ 90 µm ALL THE DIMENSIONS EXPRESSED IN THE DRAWING DON'T CONSIDER THE THICKNESS OF THE PAINT		
5	**PM.1066**	Backing plate	2
	– Plate material: **S235JR** – Plate surface: **3.579,1** mm² – General tolerances: ±0.3 – Roughness: Ra ≥ 7 µm Rz ≥ 45 µm		
5	**PM.1066A**	Backing plate	2
	– Plate material: **S235JR** – Plate surface: **3.651,1** mm² – General tolerances: ±0.3 – Roughness: Ra ≥ 7 µm Rz ≥ 45 µm		
6	**ML.238K**	2x acustic sensor	1
	– Spring material: **steel 65Mn** – Surface treatment: **degreasing**		
7	**ML.340**	Acoustic wear sensors	2
	– Spring material: **steel 65Mn** – Surface treatment: **degreasing**		
8	**AV.843**	Anti–noise shim	2
	– Spring material: **multilayer rubber–steel–rubber** – Surface treatment: **smooth**		
9	**AV.844**	Anti–noise shim	2
	– Spring material: **multilayer rubber–steel–rubber** – Surface treatment: **smooth**		

REVISIONS & MODIFICATIONS

REV	DATE	R.d.M.	DESCRIPTION	SIGNATURE

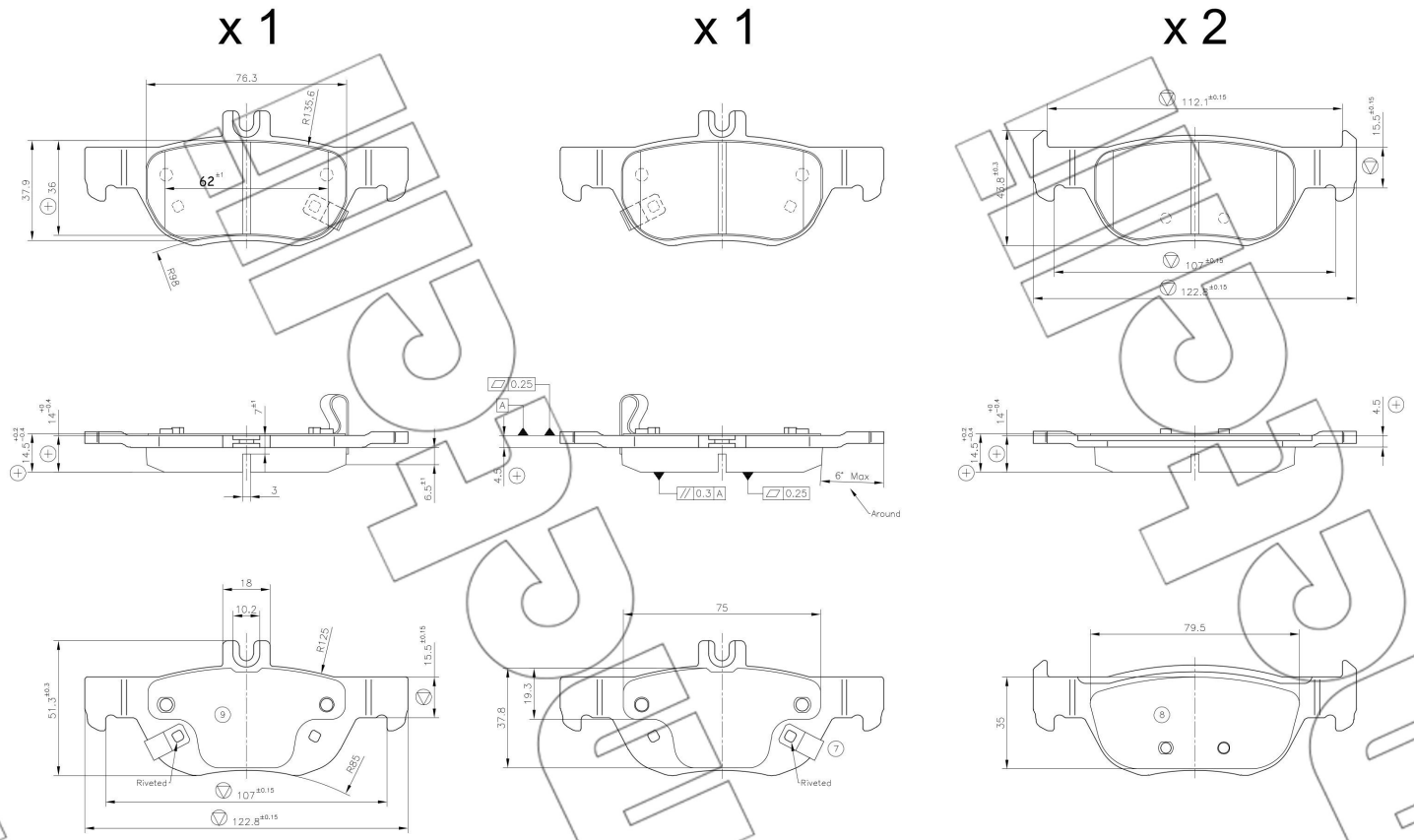

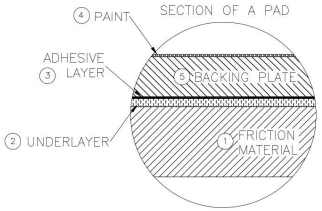

KIT INCLUDED WITH THE PADS SET

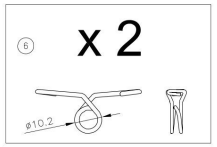

UNLESS OTHERWISE STATED THE FOLLOWING APPLIES:

- General symmetry ⌯ 0.3 Z
- Control of prohibited and restricted substances according to PSA–51
- Identification of key characteristics according to PQ–30
- Abbreviations according to Mod.UT–63

CRITICALITY LEGEND

REPORT	12	CRITICAL	7	IMPORTANT	14

CAD DRAWING – MANUAL MODIFICATIONS ARE NOT ALLOWED

Part name	BRAKE PADS		Prod. class (PQ–16)	1D
Reference Code	1226.0			
	Signature	Date	Draw. N° 5535	Scale 1:1
Drawn	Castellino A.	22.01.2021		Size A1
Approved	Balocco E.	22.01.2021		
Verified	Chiecchio M.	22.01.2021		
Description	COMPLEX PROJECT DRAWING			

fri.tech.

Mod.UT–58 1226_0.dwg