MOOG

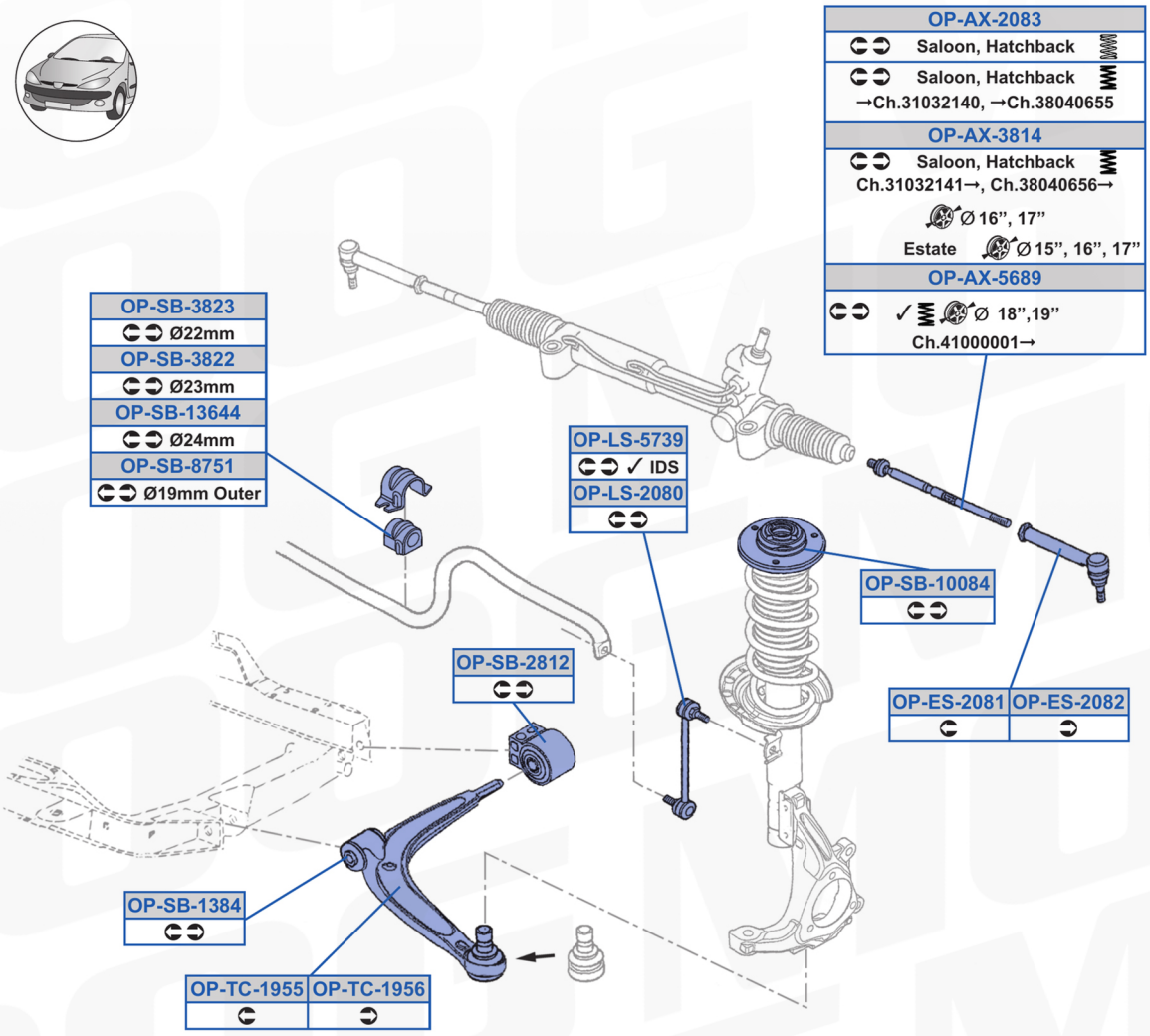

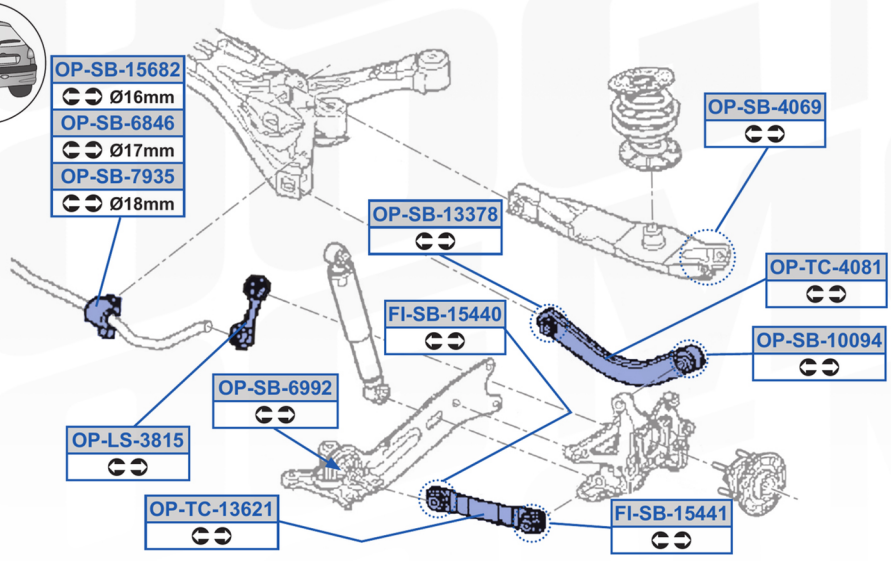

OPEL-VECTRA-C

2023-10-30

www.moogparts.com