MONROE®

T 0233

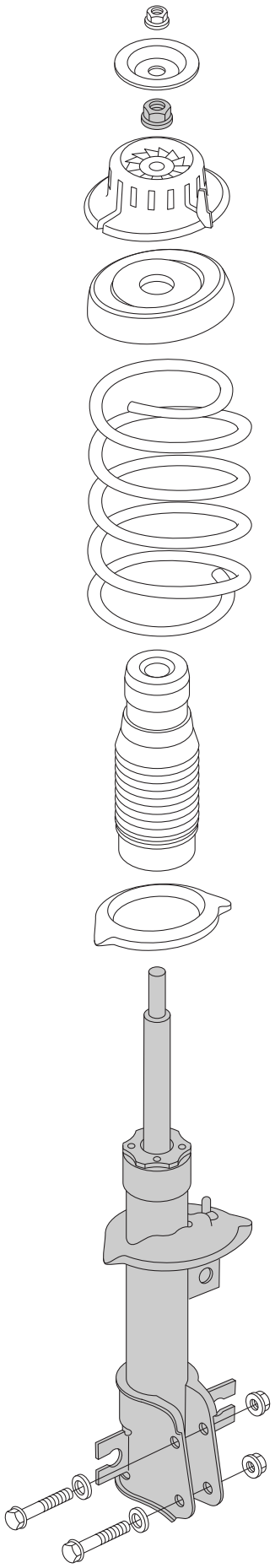

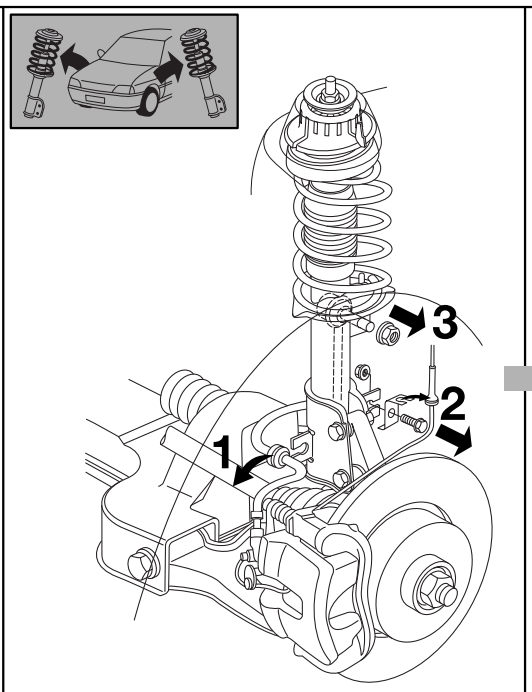

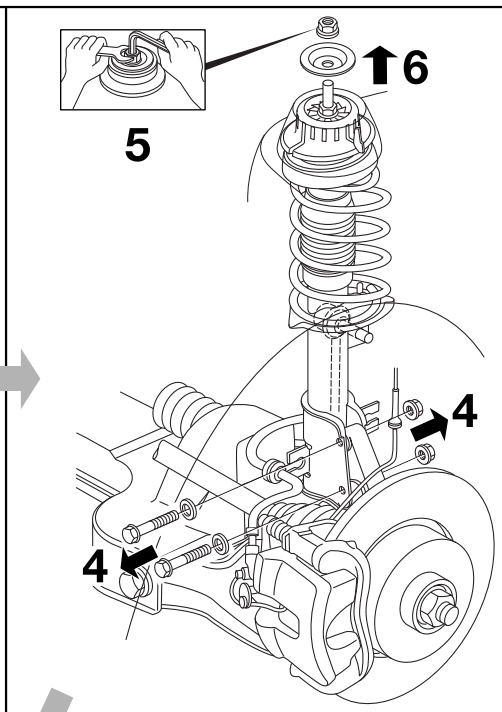

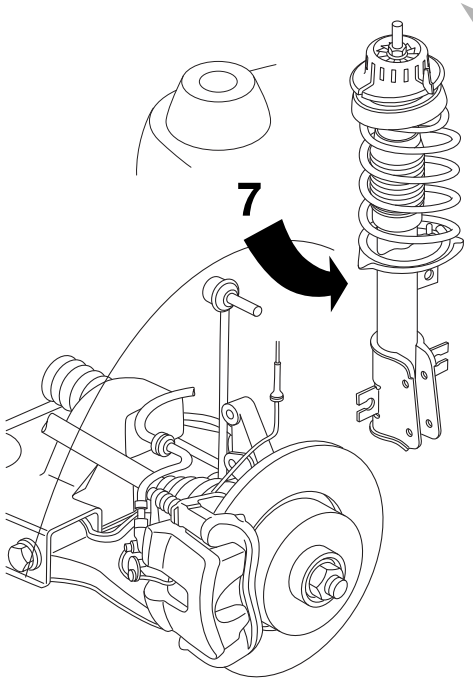

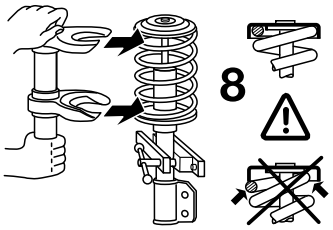

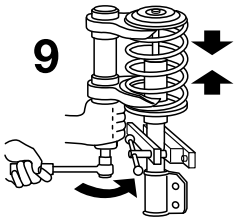

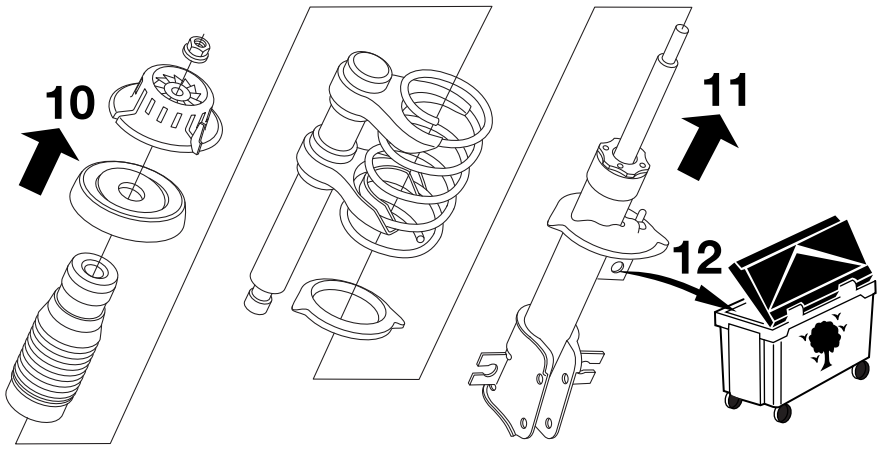

E.T.A.I 04/03

© Monroe all rights reserved.