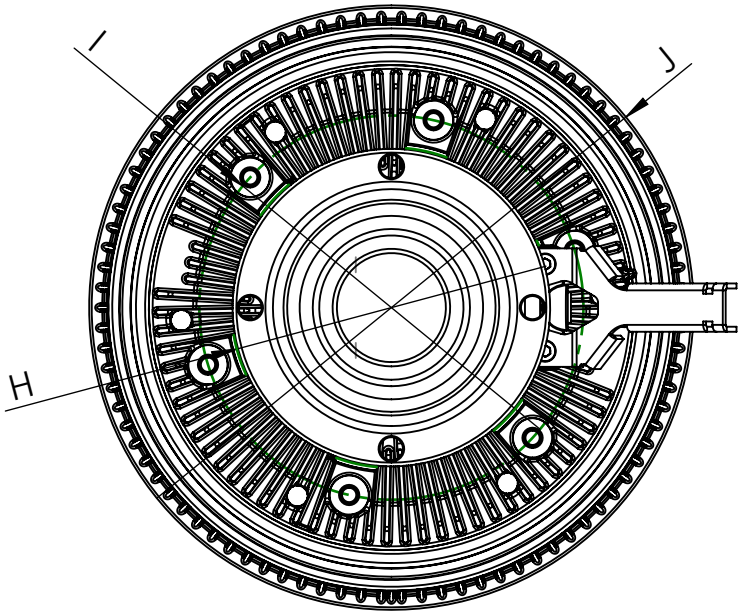

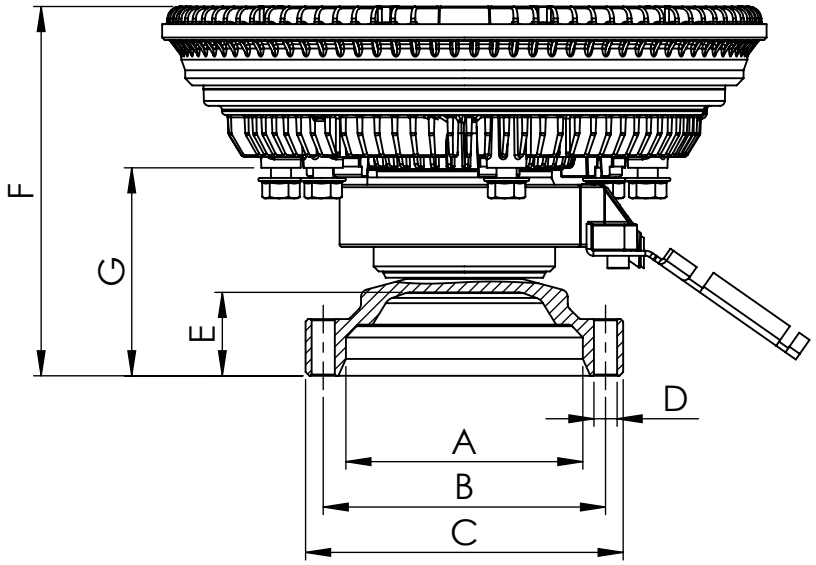

Dimensional values

INPUT SHAFT				FAN CLUTCH			
Ref. nº	**Value**	**Ref. nº**	**Value**	**Ref. nº**	**Value**	**Ref. nº**	**Value**
A	∅94 H8 mm			F	146.5 ±1 mm		
B	∅112 mm			G	82.5 ±0.5 mm		
C	∅126 mm			H	∅127 0 -0.3 mm		
D	4x ∅9.2 mm			I	∅152.4 ±0.5 mm		
E	33.1 ±2 mm			J	∅239.8 mm		

Modification

nº	Modified	Date	Reason
4			
3			
2	A.G.	23/11/20	Modify the bottom of the shaft.
1	A.G.	01/10/20	Modify the bottom of the shaft.

Comments

General Tolerance: ISO 2768 c-K

Material

Drawn: 04/05/20 S.F.

Checked: 04/05/20 A.D.

Assembly: Technical sheet

Part name: Fan clutch

ID. Reference: 7023410

Scale: 1/3

Review: 2

Sheet 1/1