T 0107

MONROE

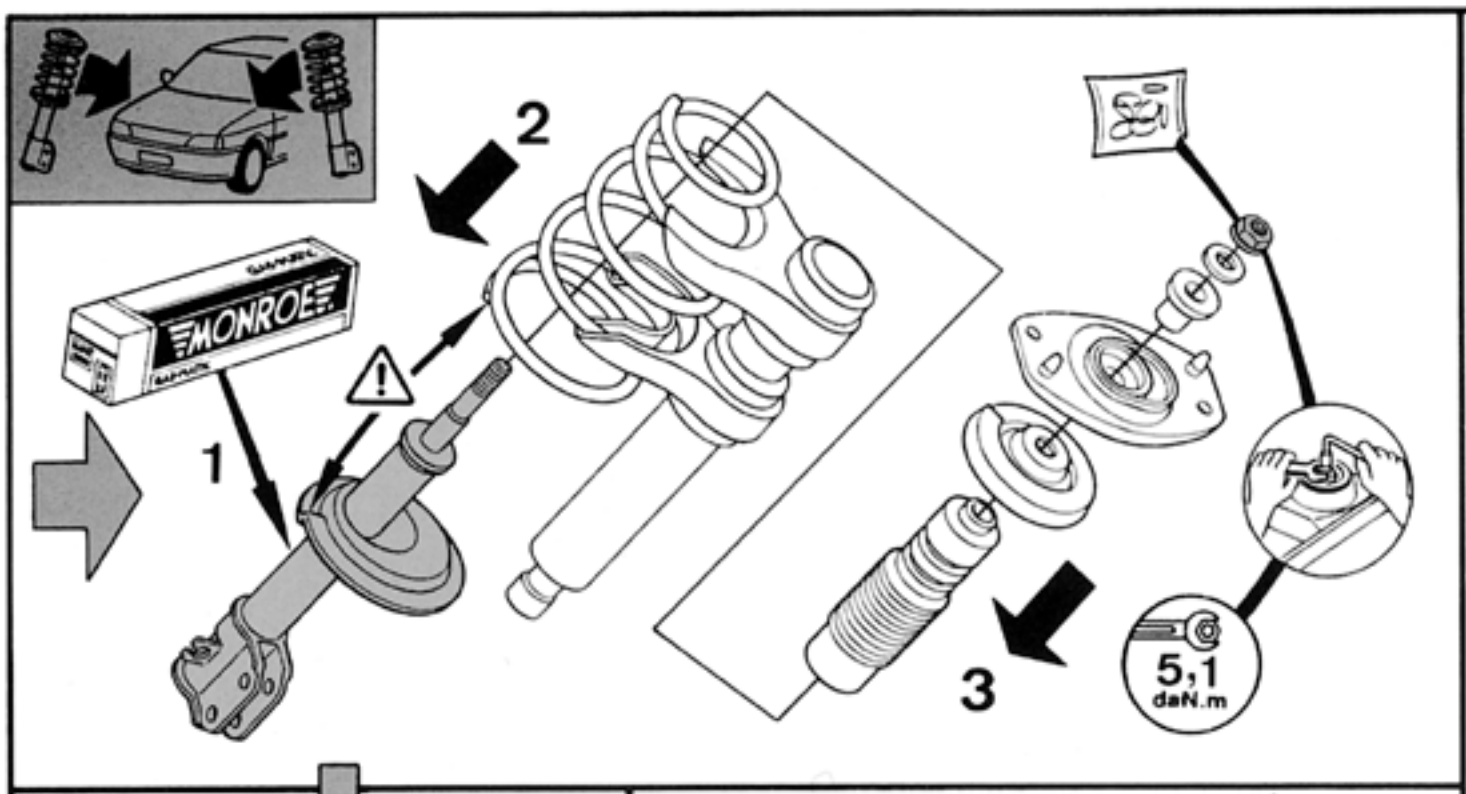

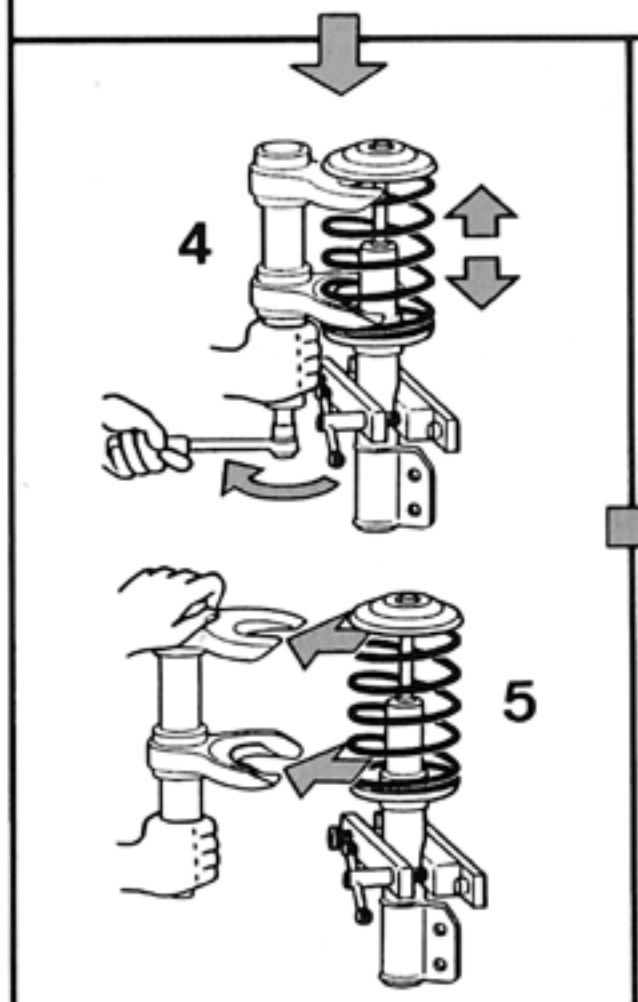

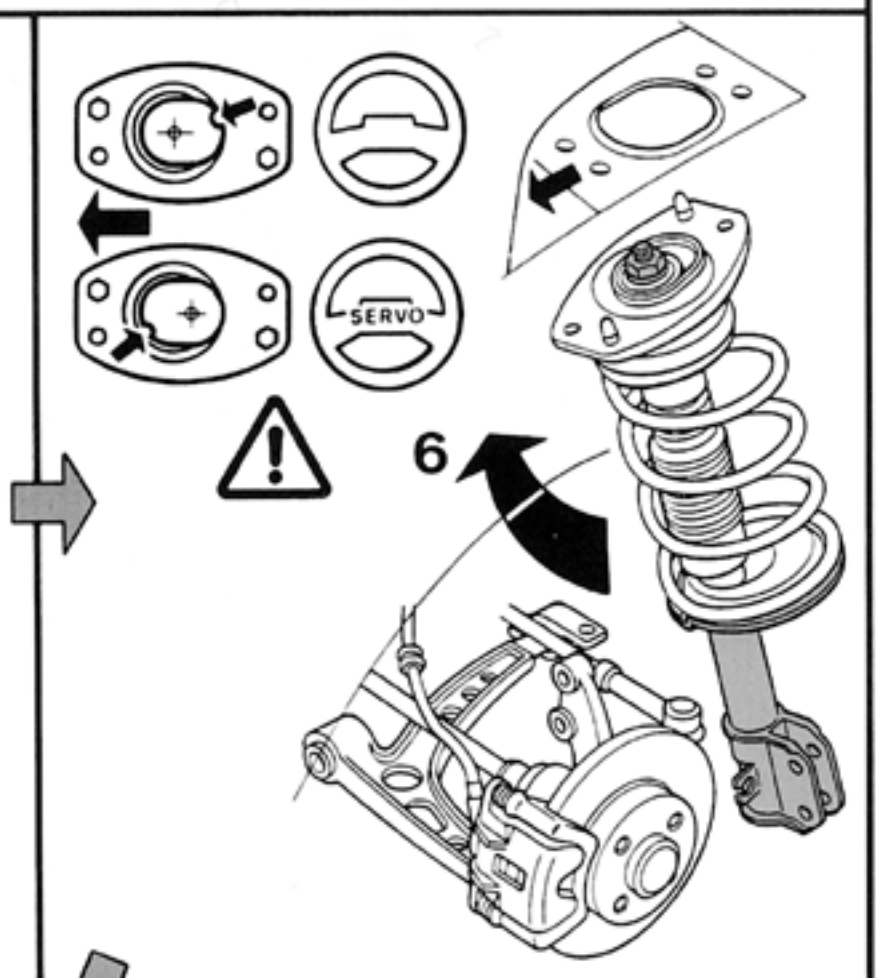

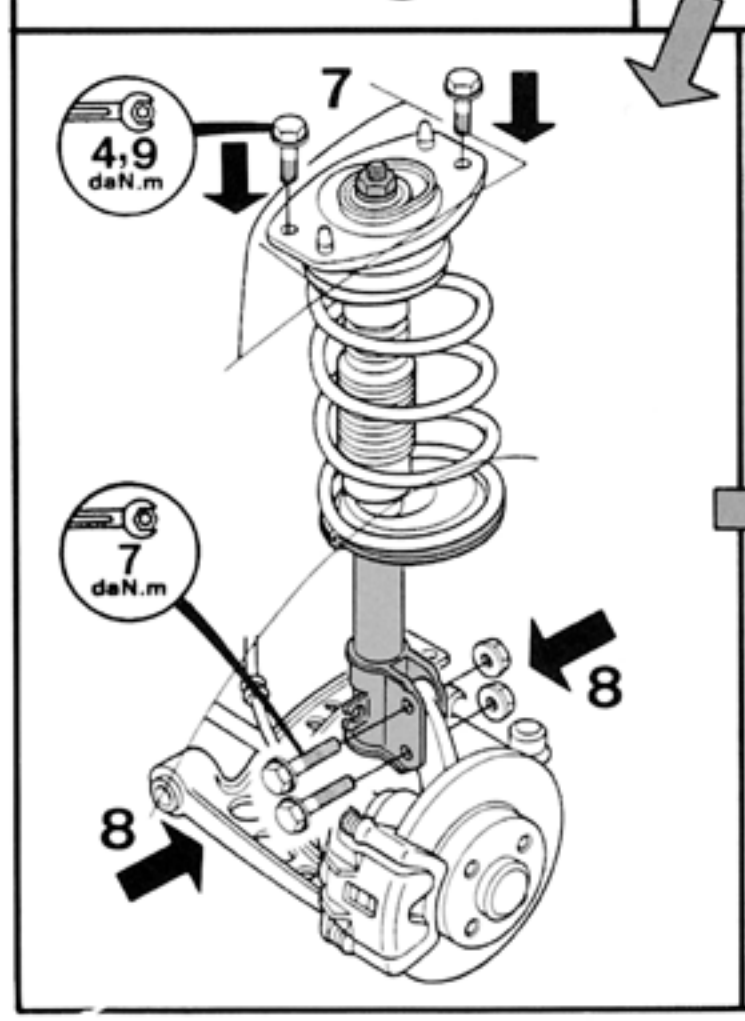

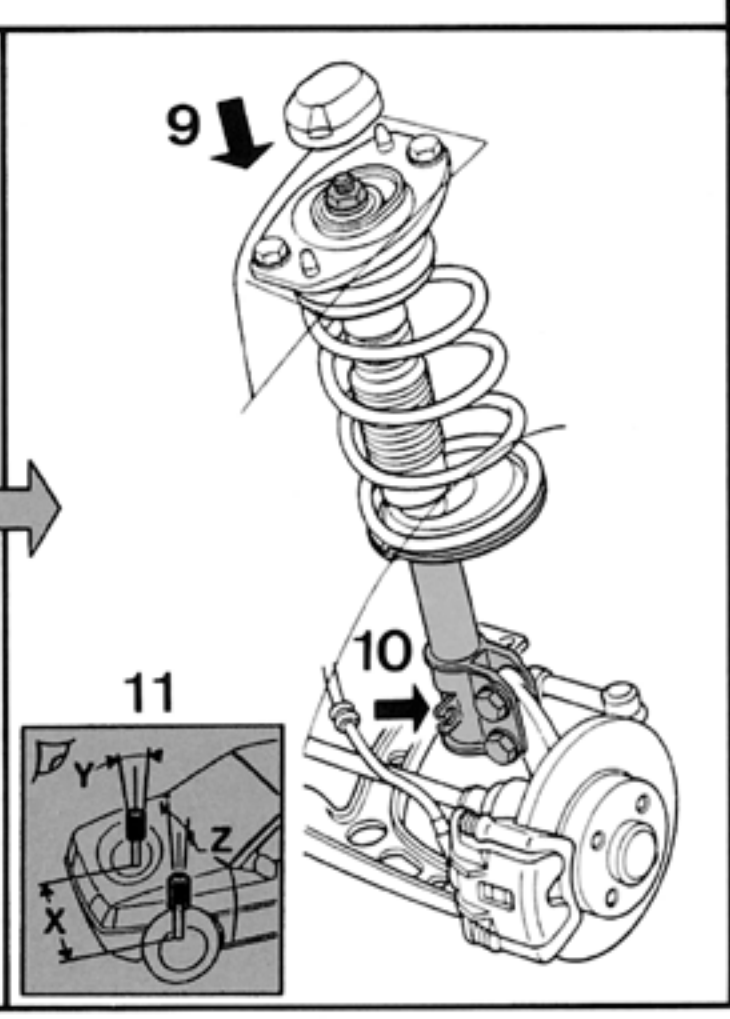

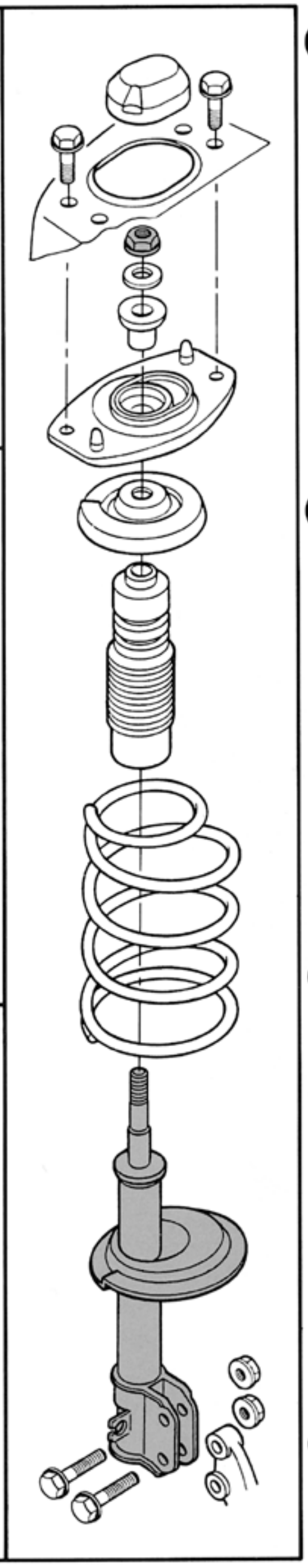

© Monroe all rights reserved