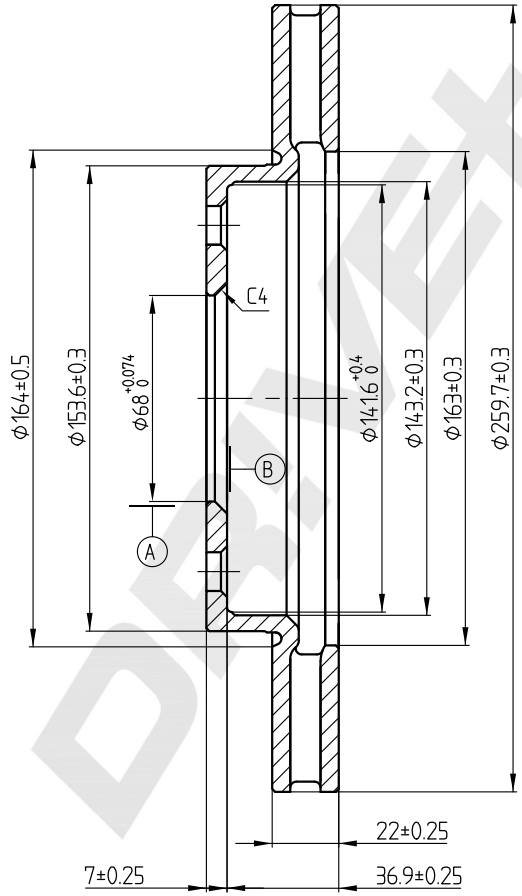

MIN THK 20 MM

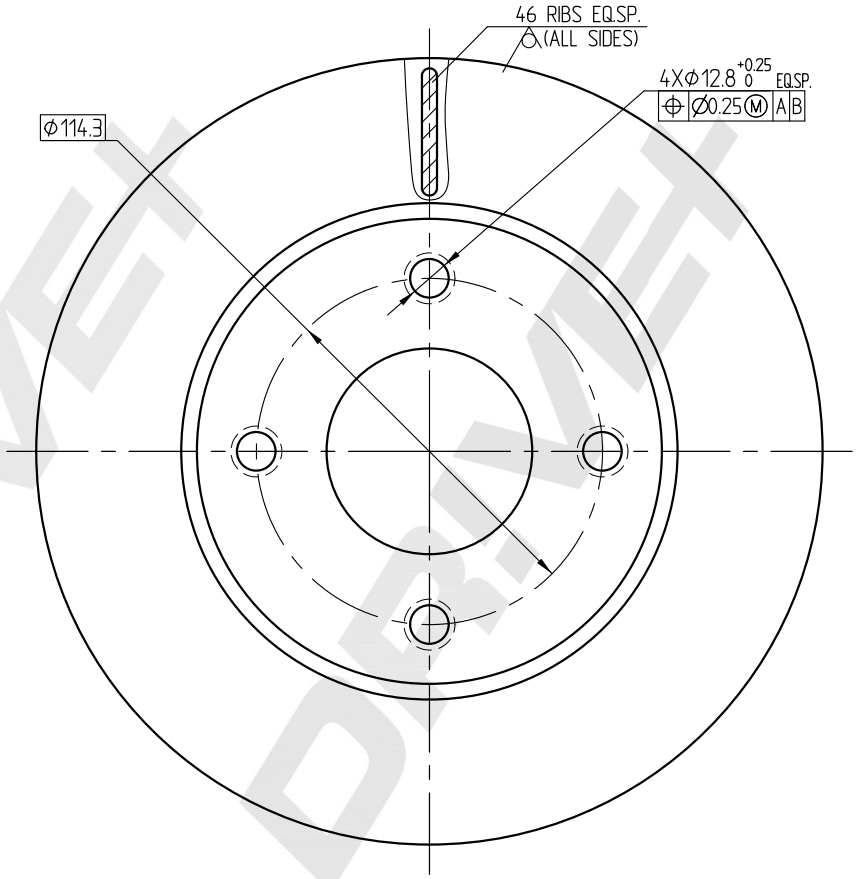

DP Number	Part Number	Drawing Version Number	Drawing Issue Date
DP1010.11.1906S	DBD1906S	V1	2025.04.19

DRIVE+